Ketra Emergency and Fire Alarm Integration

For KetraNet-based Ketra commercial standalone applications

Emergency lighting is an important aspect of designing a lighting system for commercial spaces. The system requirements are defined by several codes and standards. These requirements can be fulfilled by using a variety of equipment and methods. The purpose of this application note is to provide an understanding of how the basic emergency system can work with Ketra products used in a commercial standalone application and to show how to wire emergency load control devices to Ketra system devices. It is not intended to provide a design guide for emergency systems. This guide focuses on installations in the United States. Consult local and national codes for emergency lighting requirements in other countries. For more detailed overview and background on emergency lighting and related codes and standards, see Lutron Application Note #106 (P/N 048106) at www.lutron.com

This application note does not cover Clear Connect-Type X Ketra products. For information on emergency lighting with Clear Connect-Type X (CCX) Ketra lamps and fixtures in an Athena system, see the Lutron Emergency Lighting Application Note #106 (P/N 048106).

Emergency Lighting with a Ketra System

In this document, the text and wiring diagrams explain how KetraNet-based Ketra devices work with emergency lighting applications and other third-party equipment in commercial standalone applications. All information presented here is for reference only. Always check installation instructions, appropriate codes/standards, and the Authority Having Jurisdiction (AHJ) for the requirements of all equipment included in the design of an emergency lighting system.

Table of Contents

Ketra Emergency Sequence of Operations (SOO)

The basic SOO of a Ketra system locking out and then being restored is described below.

1. All Ketra emergency luminaires and lamps require a 2 second power interruption to activate emergency mode and ensure that they go to the emergency lighting level when normal power is lost.
   a. The following devices achieve a power interruption greater than 2 seconds:
      i. Generator
      ii. Programmable UPS - some inverters can be programmed to interrupt power for a configurable amount of time
      iii. LUT-ATS-D with proper DIP switch settings
2. In a single KetraNet system, emergency will disengage through steps 1 and 2 in the figure below. In a multi-KetraNet system, emergency will disengage through steps 1-4. In the figure below, assume emergency power transfer is more than 2 seconds with no fire alarm activation:

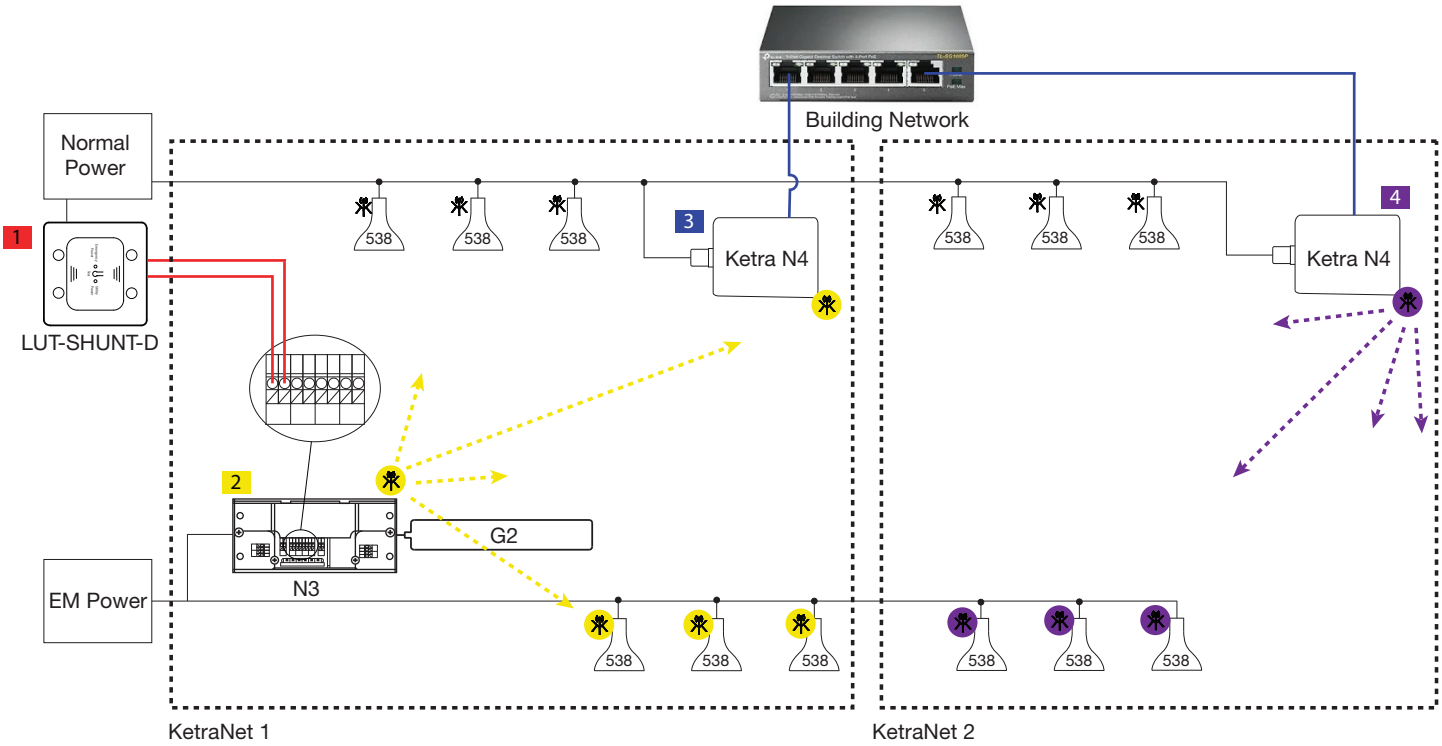

STEP 1:	LUT-SHUNT-D detects restored normal power and sends a maintained contact closure signal to the N3.
STEP 2:	N3 broadcasts a “disengage lockout” message to the nodes in KetraNet 1.
STEP 3:	N4 in KetraNet 1 receives message and relays that information to the N4 in KetraNet 2 through the building network.
STEP 4:	N4 in KetraNet 2 receives message from the N4 in KetraNet 1 and sends the “disengage lockout” message to the nodes in KetraNet 2.

Ketra Fire Alarm Lockout Sequence of Operations

1. A fire alarm control panel triggers the LUT-ATS-D to create a 2.5 second power interrupt, which activates the emergency state of the lamps and luminaires. LUT-SHUNT-D will also send a maintained contact closure signal to the N3 to let it know emergency devices should be in a lockout state.
2. Fire alarm control panel triggers the LUT-SHUNT-D to send a maintained contact closure signal to the N3, disengaging emergency lockout. Same as step 2 in a single KetraNet system and 2–4 in multi-KetraNet systems in the emergency SOO section.

Ketra Emergency Requirements

- One N3 is required per installation for the LUT-SHUNT-D contact closure connection.
- Only one N3 can be used with the LUT-SHUNT-D per installation.
- Must have at least a two second power interruption to trigger emergency mode for all Ketra emergency lamps and luminaires.
- The backup AC power source must produce a sinusoidal (sine) wave.
- Must have UL924 listed devices trigger Ketra to go into and out of emergency mode.
- Must NOT depend on wireless communication for Ketra to go into emergency mode.
- Ketra N3 can only receive a maintained contact closure input to disengage emergency lockout.
- Ketra linear luminaires are powered by the N3. To cycle power to any Ketra linears, cycle power to its N3.
- If part of a linear run is designated for emergency, either the entire run must be emergency or another N3 should be added for the emergency linear. An example of an emergency linear is shown in the drawing below. The highlighted run is the emergency path of L4 cable and L3I linear fixtures:
  - This highlights how an additional N3 was added for the emergency linear luminaires.

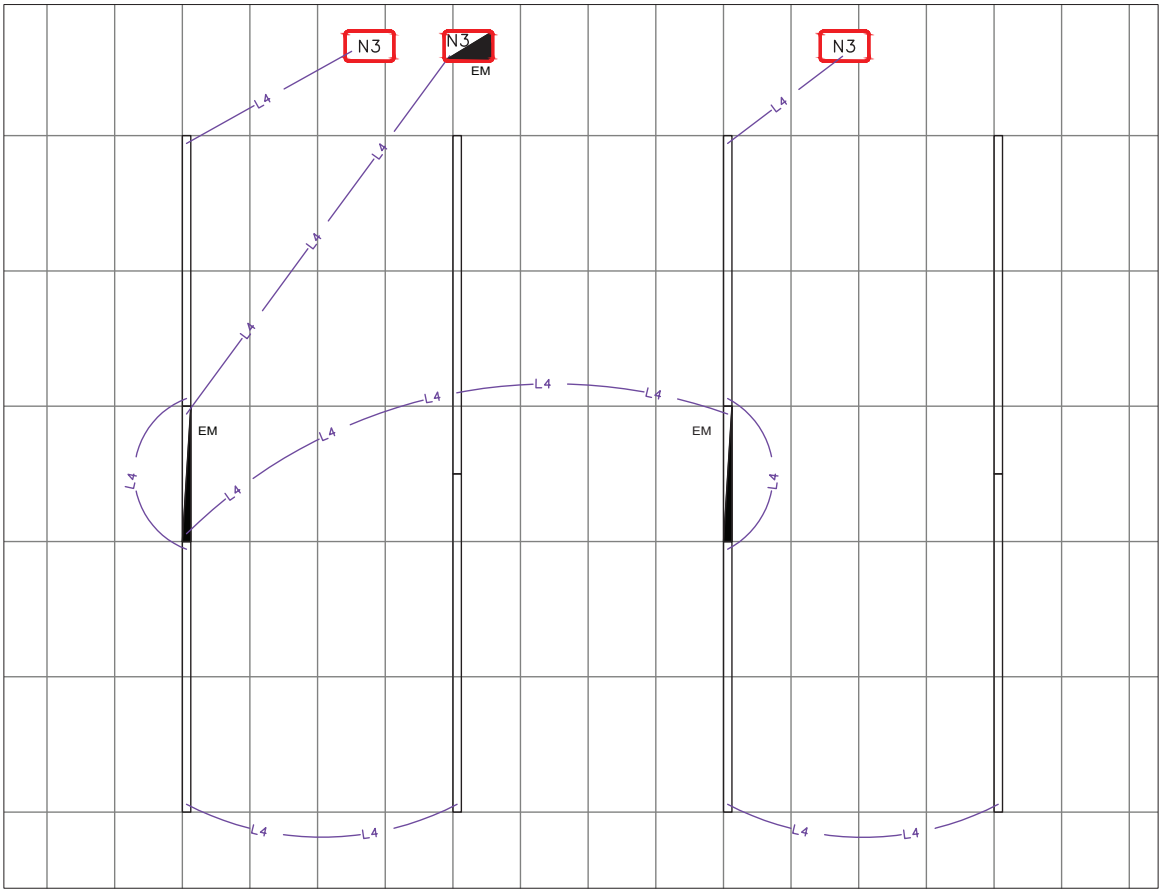

Ketra Emergency Best Practices

- Emergency power source is a generator or a programmable inverter that can be programmed to interrupt the power for more than two seconds. This eliminates the need to add LUT-ATS-D devices.
- One LUT-ATS-D device per emergency circuit that powers Ketra fixtures, if a two second power interrupt isn't available.
- Each LUT-ATS-D should be installed upstream of all emergency loads, directly downstream of the inverter, and in an accessible location for testing.
- The LUT-ATS-D is also required for fire alarm activation.

Ketra Emergency Applications

The defining factors are:

1. Is there fire alarm integration?
2. Is the emergency power transfer greater than two seconds?
3. What Ketra product is on the emergency system?

The flow chart below incorporates the defining factors listed above to determine the desired emergency scenario and its corresponding emergency devices. The flow chart will direct you to a specific section and provide a wiring diagram with an explanation of functionality and list of required equipment.

- Linear luminaire: G2, L3I, L4R
- Luminaire: D3, D4R
- Lamp: A20, S38, S30

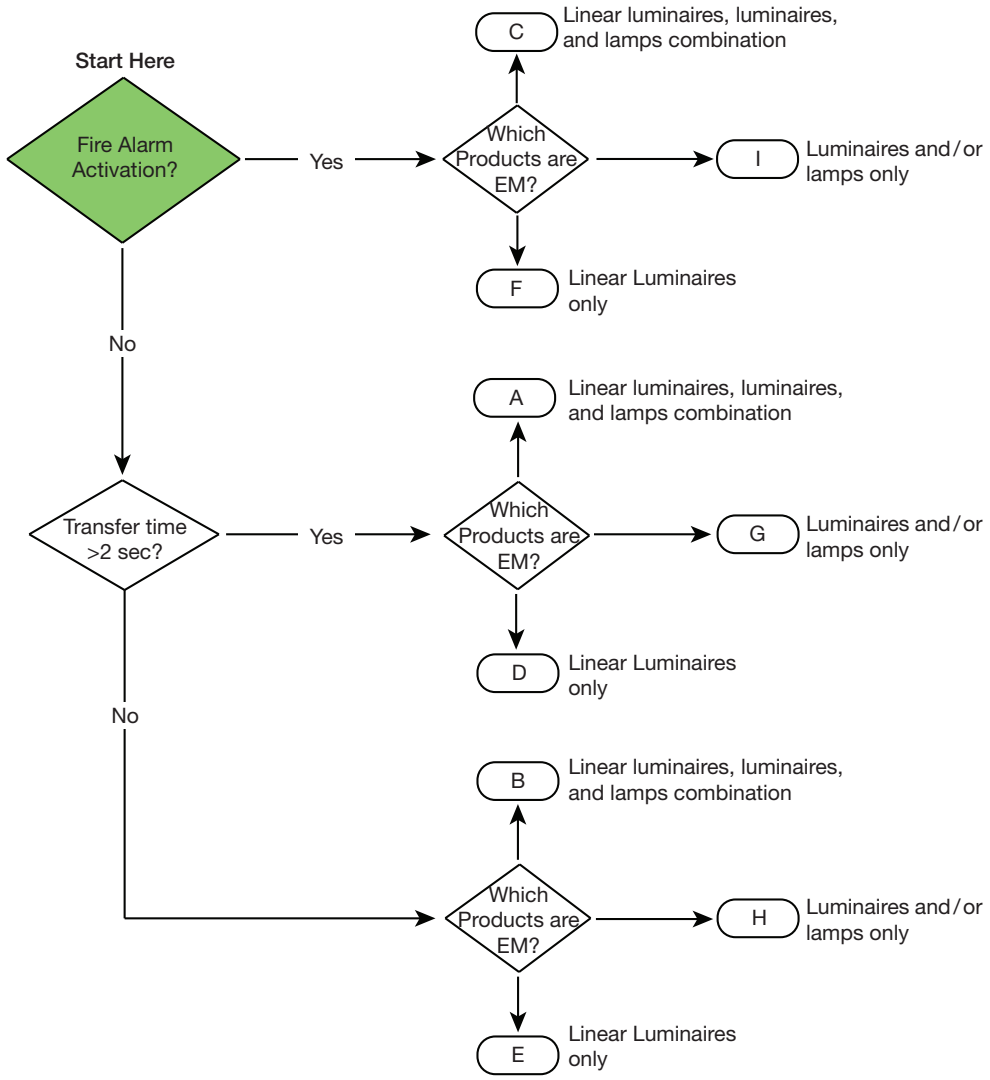

Control of Non-Ketra Emergency Loads from a KetraNet System

Non-Ketra load types, such as switching, 0–10 V, and DMX, can be controlled from a KetraNet system using the low-voltage COM ports on the KetraNet N3 satellite. If non-Ketra loads are being used for emergency lighting, reference the Lutron Emergency Lighting Application Note #106 (P/N 048106) for more information on required equipment and wiring details.

Load Type	How to Control	If used for emergency lighting refer to...
Switching loads	Use a Lutron PP-DV power pack to accept a low-voltage signal from 1 of the COM ports on the Ketra N3.	App Note #106 (P/N 048106): “Line-voltage switching controls”
0–10 V loads	Use a Lutron PP-DV power pack to accept a low-voltage signal from 1 of the COM ports on the Ketra N3 and use a consecutive COM port on the N3 for the low-voltage 0–10 V dimming signal.	App Note #106 (P/N 048106): “Line-voltage 0–10 V Dimmers”
DMX	Use the DMX output on the Ketra N3 to control DMX loads.	App Note #106 (P/N 048106): “DMX Output Devices”

Application A

Defining factors:

- Emergency power transfer greater than 2 seconds
- No fire alarm activation
- Linear luminaires and luminaires/lamps

In the application where emergency power transfer is greater than 2 seconds, no fire alarm activation is necessary and there is a combination of linear luminaires and luminaires/lamps the only device required is the LUT-SHUNT-D. Upon loss of normal power, emergency power will be restored with a greater than 2 second transfer time, the Ketra luminaires/lamps and linear luminaires will automatically lock out and go to their programmed emergency light level. The LUT-SHUNT-D will monitor normal power and output a contact closure to the N3. When normal power is present the switch is in the closed state. When normal power is lost, the switch will be in the open state. Upon restoration of normal power, the switch in the LUT-SHUNT-D will close. The N3 will receive this contact closure and will broadcast a command for the Ketra luminaires/lamps and linear luminaires to go back to regular operation.

Wiring Schematic

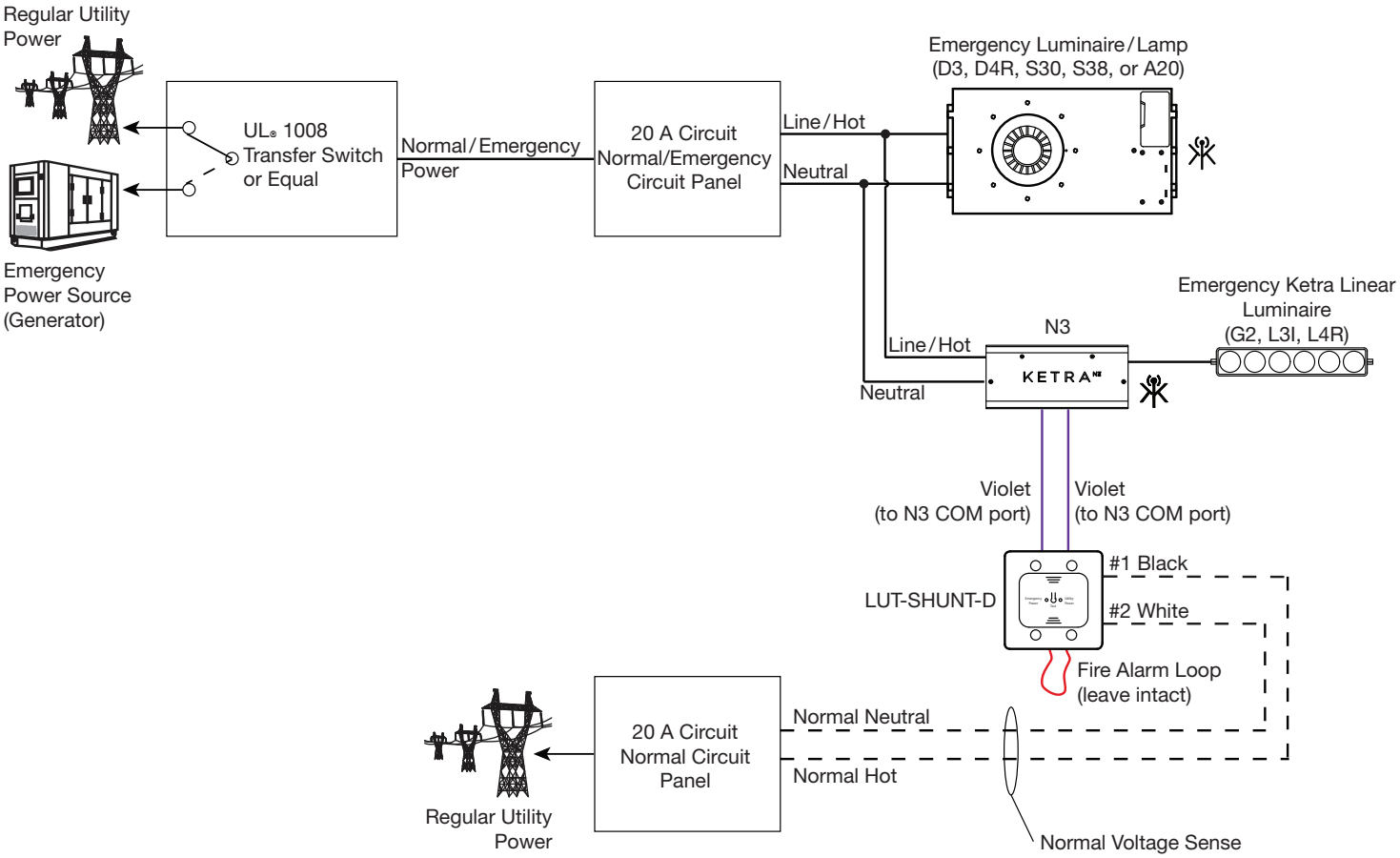

Application A (continued)

Regular Operation

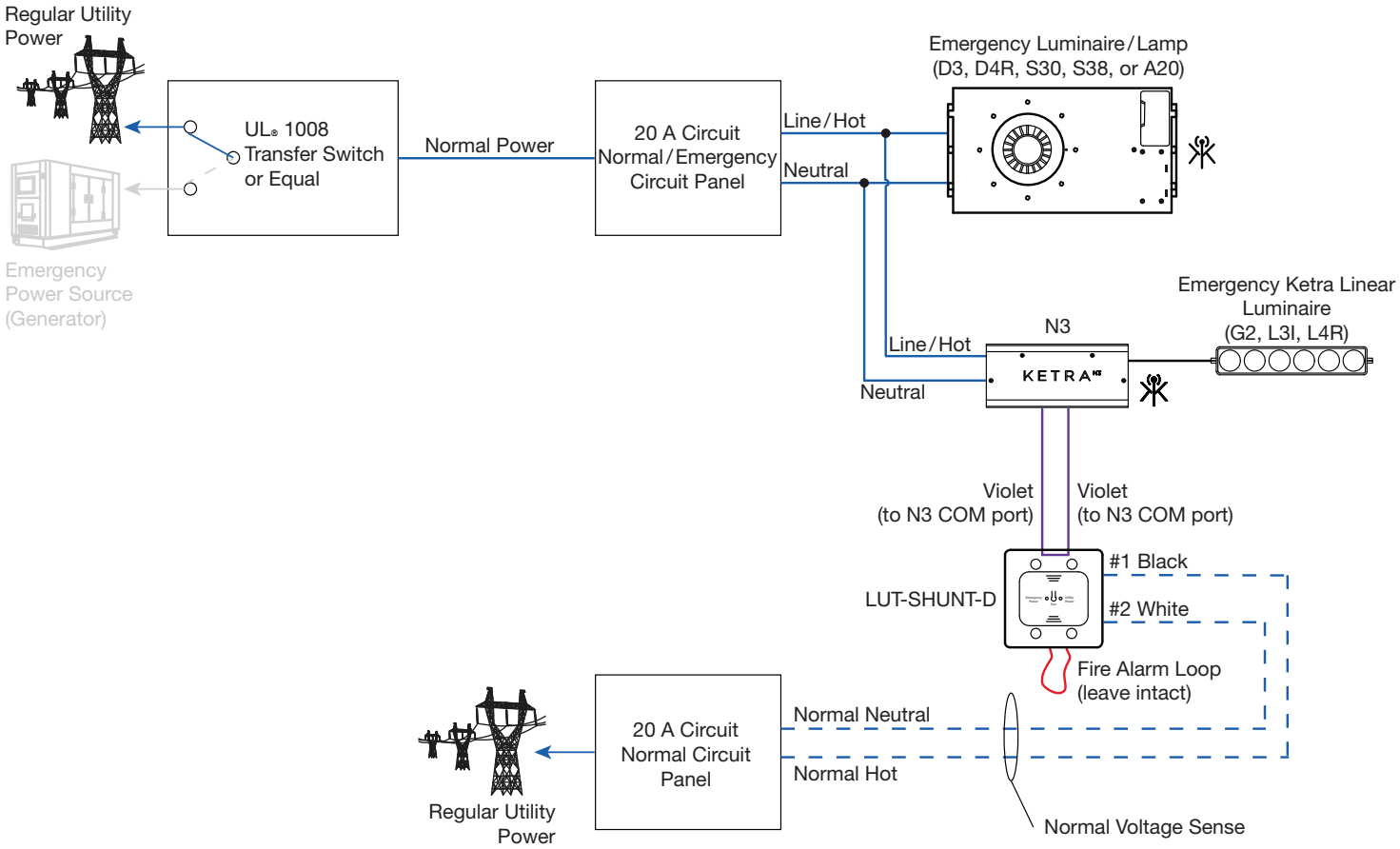

Application A (continued)

Emergency Operation

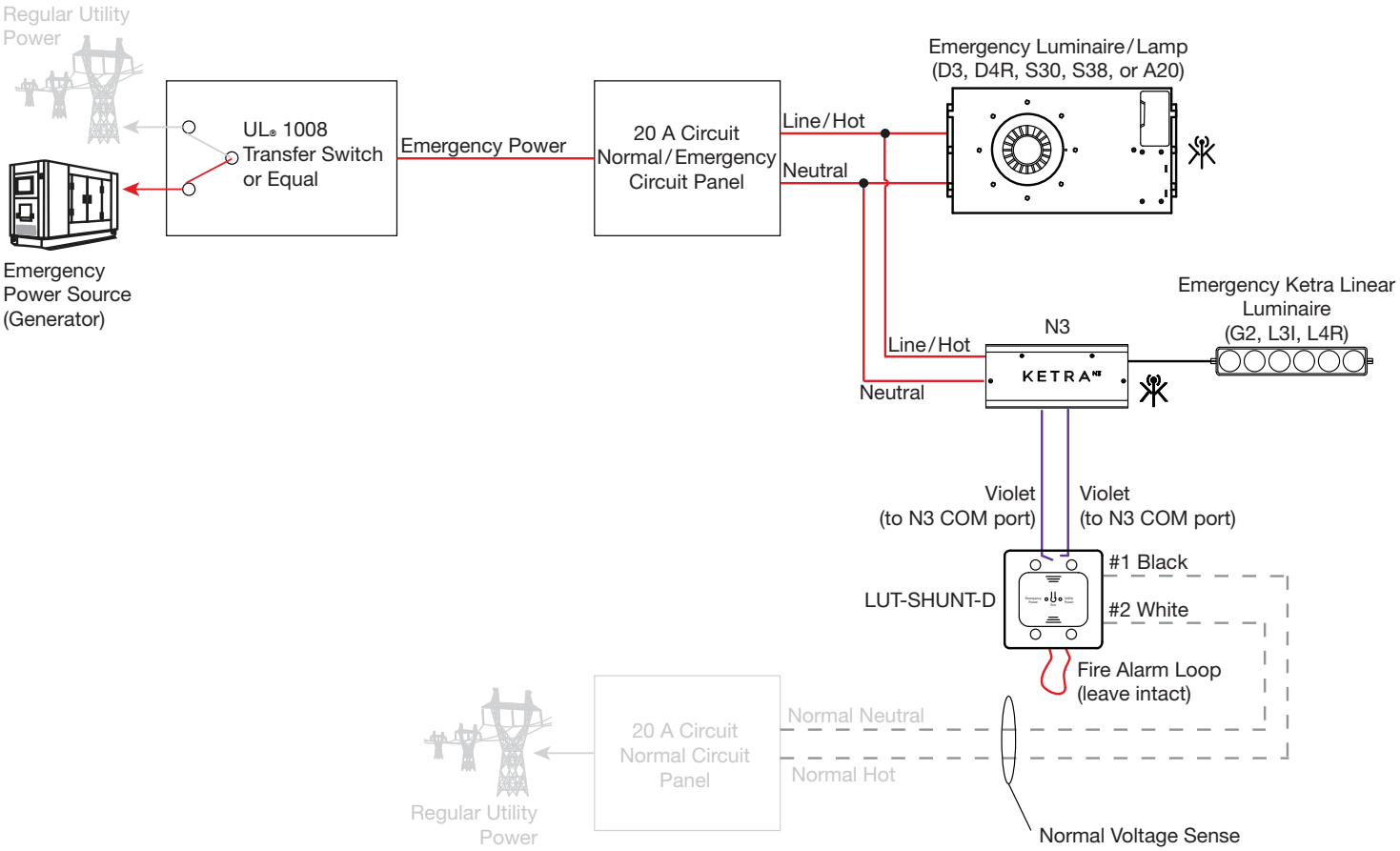

Application B

Defining factors:

- Emergency power transfer less than 2 seconds
- No fire alarm activation
- Linear luminaires and luminaires/lamps

In the application where emergency power transfer is less than 2 seconds, no fire alarm activation is necessary and there is a combination of luminaires/lamps and linear luminaires the LUT-ATS-D and the LUT-SHUNT-D are required. Only 1 LUT-SHUNT-D per system is required. The quantity of LUT-ATS-D is dependent on the number of feeds supplying the Ketra emergency luminaires/lamps and linear luminaires. There should be a 1:1 ratio of LUT-ATS-D to circuit breakers supplying Ketra emergency luminaires/lamps and linear luminaires. Upon loss of normal power, emergency power will be restored less than 2 seconds later. This is not enough time to activate emergency lockout mode in the Ketra luminaires/lamps and linear luminaires. Because of this, the LUT-ATS-D with DIP switches set appropriately is used to create a 2.5 second power interruption that will automatically lock out Ketra luminaires/lamps and linear luminaires and they will go to their programmed emergency light level. The LUT-SHUNT-D will monitor normal power and output a contact closure to the N3. When normal power is present the switch is in the closed state. When normal power is lost, the switch will be in the open state. Upon restoration of normal power, the switch in the LUT-SHUNT-D will close. The N3 will receive this contact closure and will broadcast a command for the Ketra luminaires/lamps and linear luminaires to go back to regular operation.

Wiring Schematic

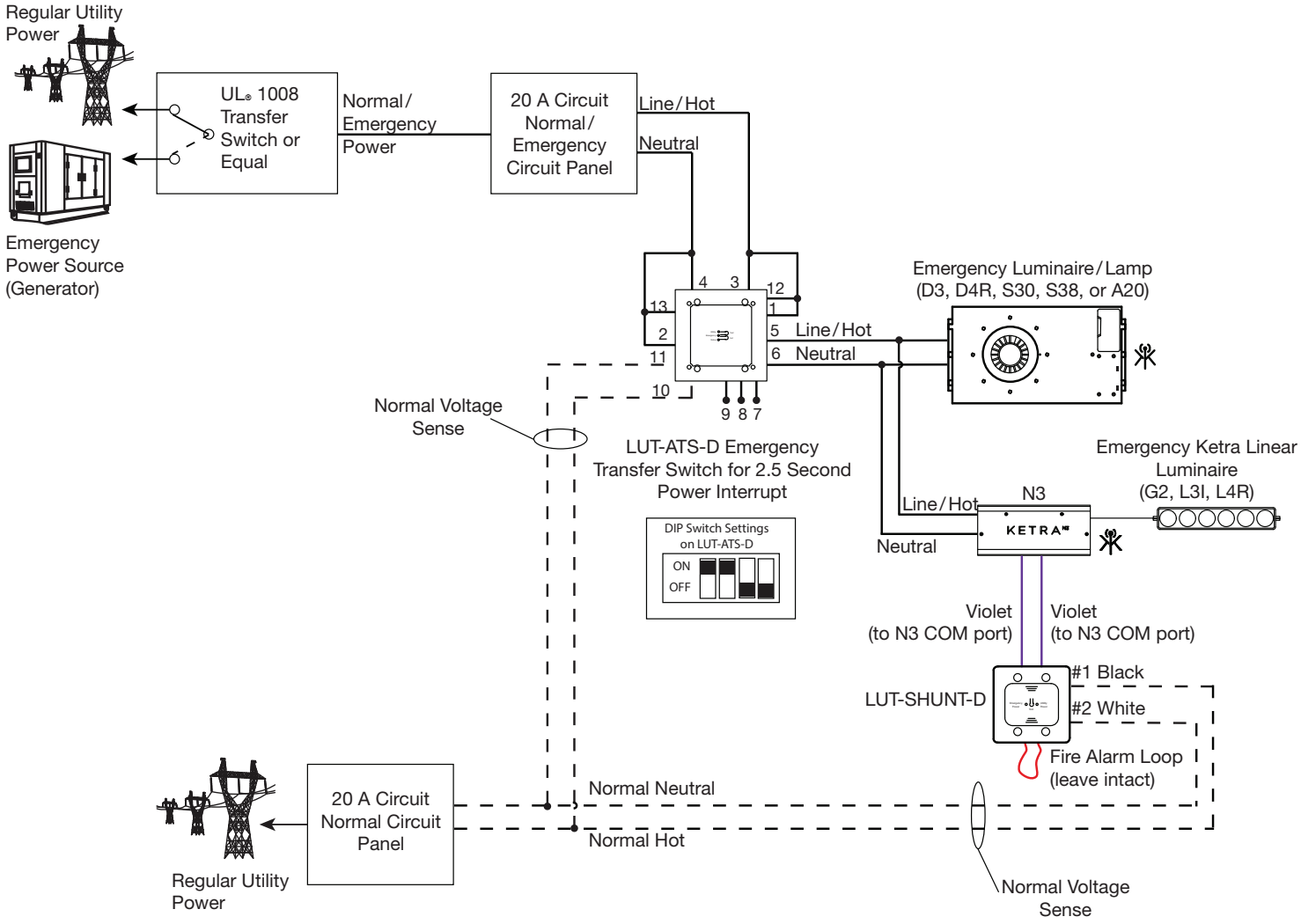

Application B (continued)

Regular Operation

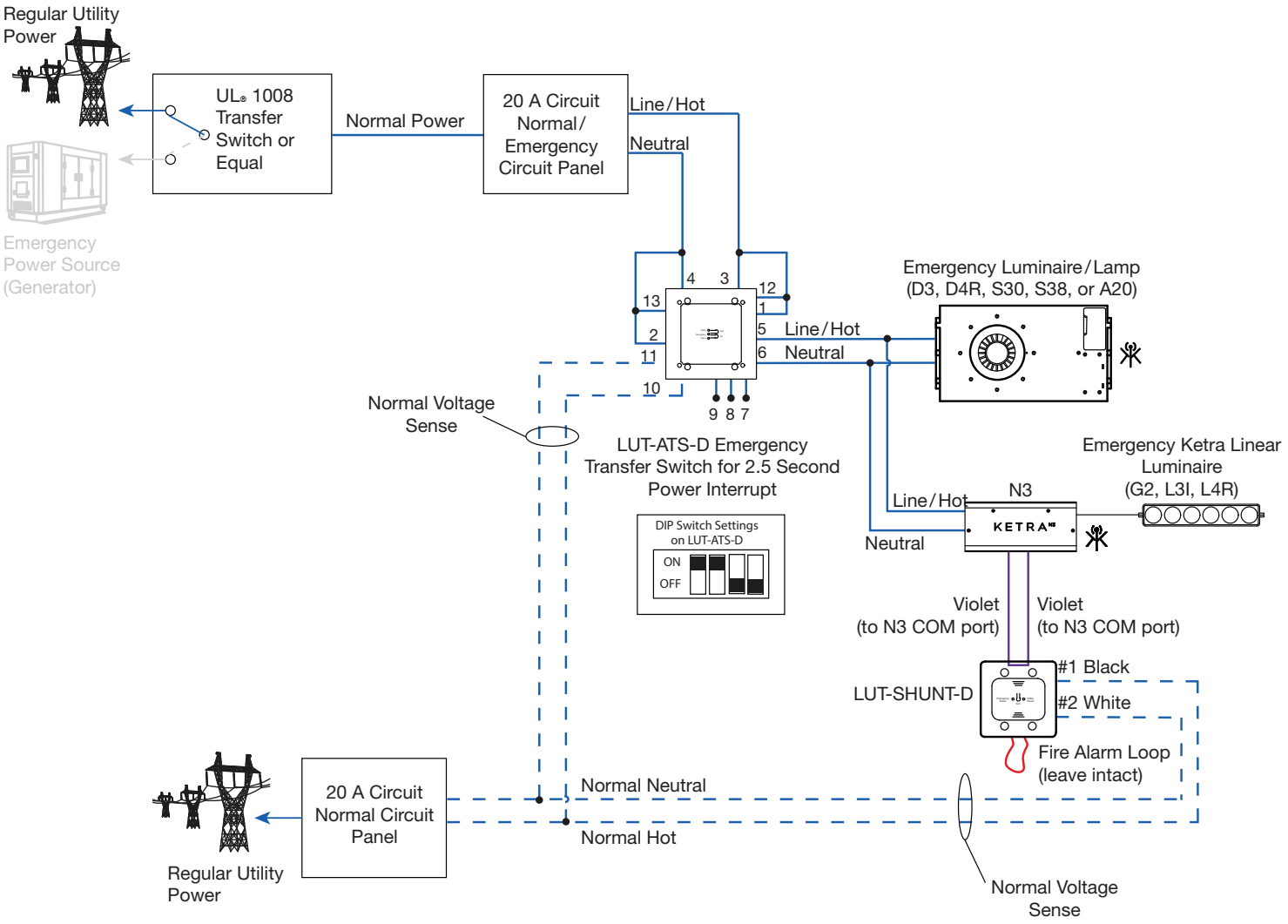

Application B (continued)

Emergency Operation

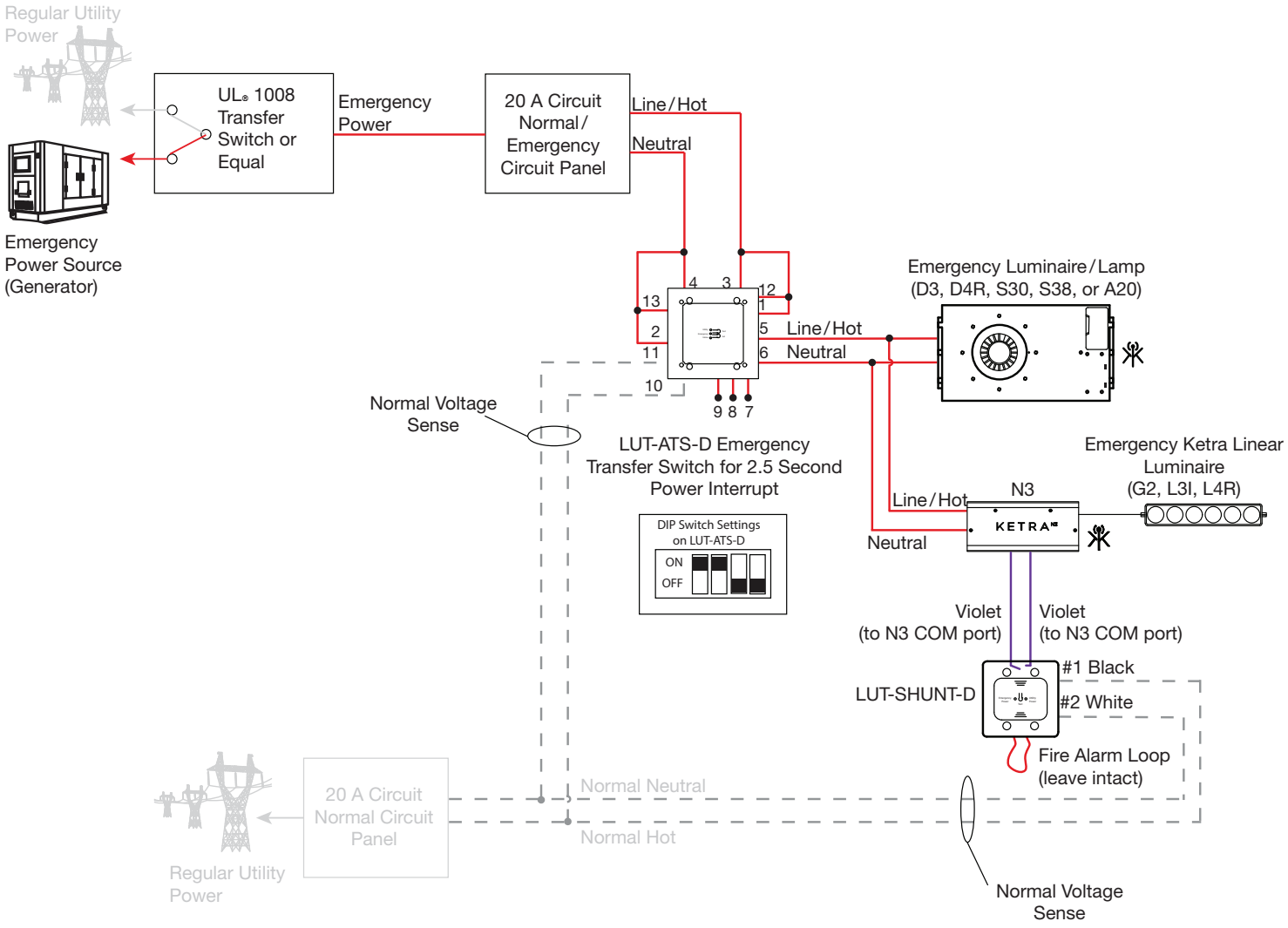

Application C

Defining factors:

- No loss of normal power
- Fire alarm activation
- Linear luminaires and luminaires/lamps

In the application where there is no loss of normal power and a fire alarm is triggered with a combination of luminaires/lamps and linear luminaires the LUT-ATS-D and the LUT-SHUNT-D are required. Only 1 LUT-SHUNT-D per system is required. The quantity of LUT-ATS-D is dependent on the number of feeds supplying the Ketra emergency luminaires/lamps and linear luminaires. There should be a 1:1 ratio of LUT-ATS-D to circuit breakers supplying Ketra emergency luminaires/lamps and linear luminaires. The LUT-ATS-D and LUT-SHUNT-D have a fire alarm connection that needs to be wired to the device sending the signal which is typically a fire alarm control panel (FACP). With the DIP switches set appropriately, the LUT-ATS-D is used to create a 2.5 second power interruption that will automatically lock out Ketra luminaires/lamps and linear luminaires and they will go to their programmed emergency light level. The LUT-SHUNT-D will change its contact closure state from close to open upon fire alarm activation. When the fire alarm closure is restored, the N3 will receive the contact closure from the LUT-SHUNT-D and broadcast a command for the Ketra luminaires/lamps and linear luminaires to go back to regular operation.

Wiring Schematic

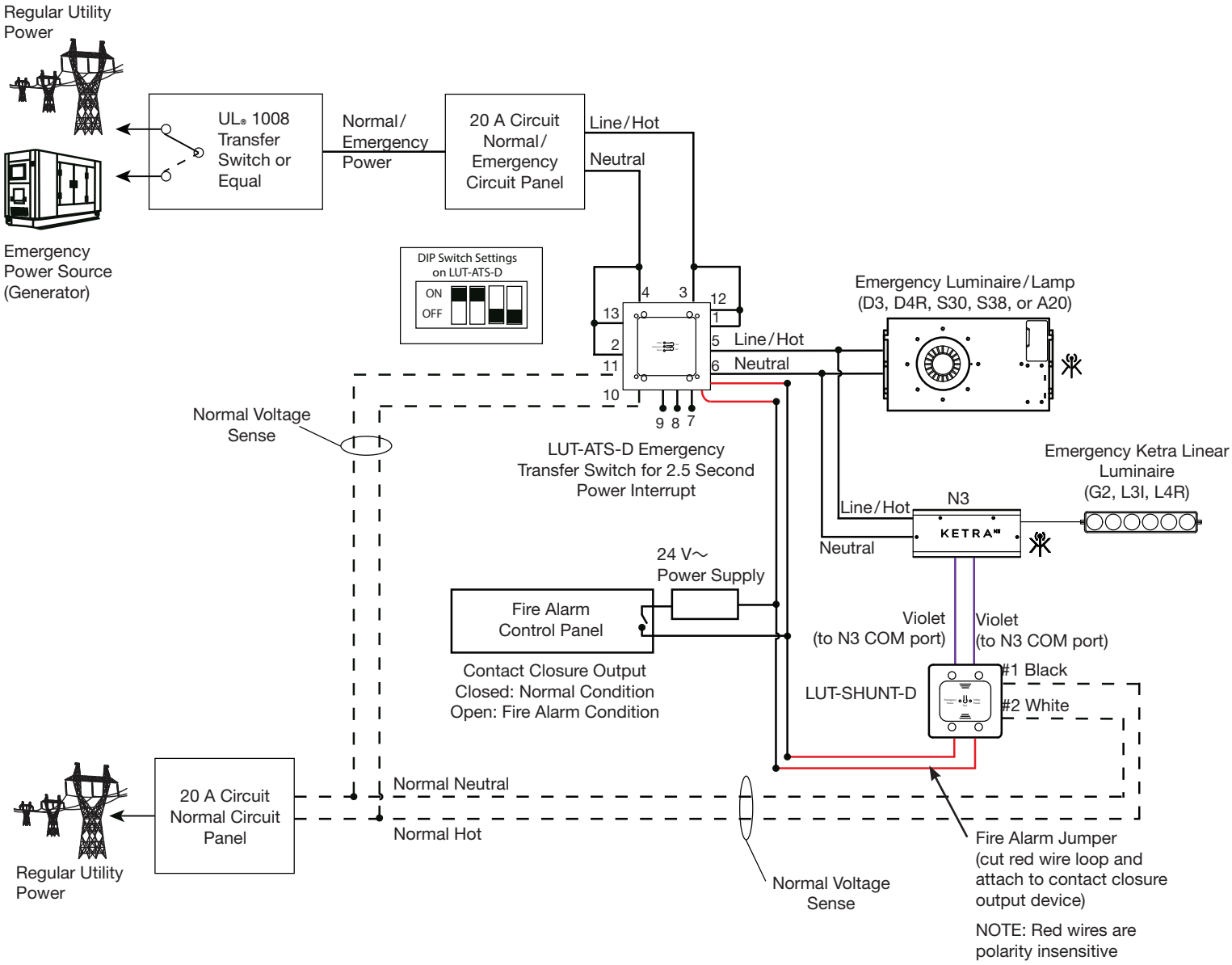

Application C (continued)

Regular Operation

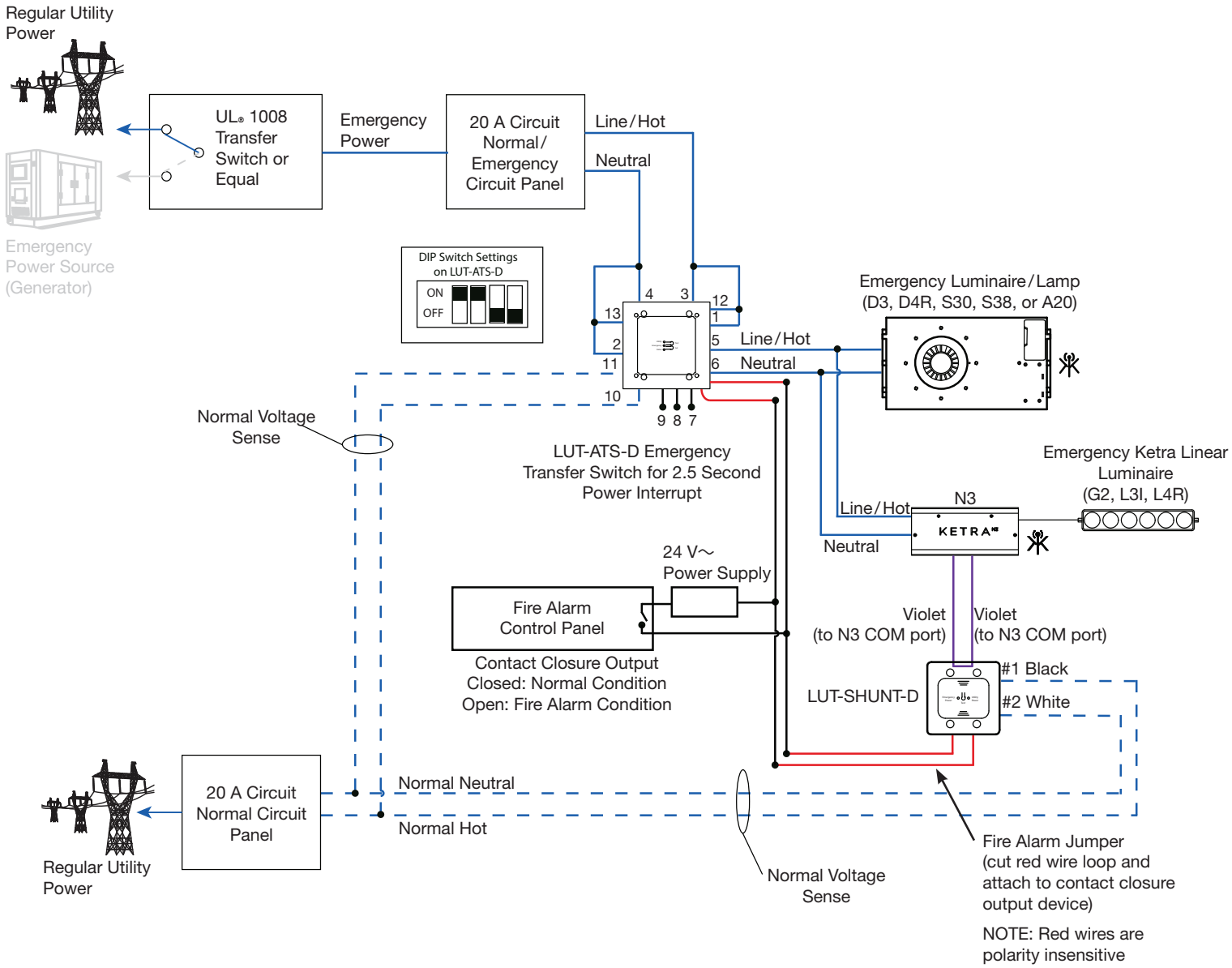

Application C (continued)

Fire Alarm Operation*

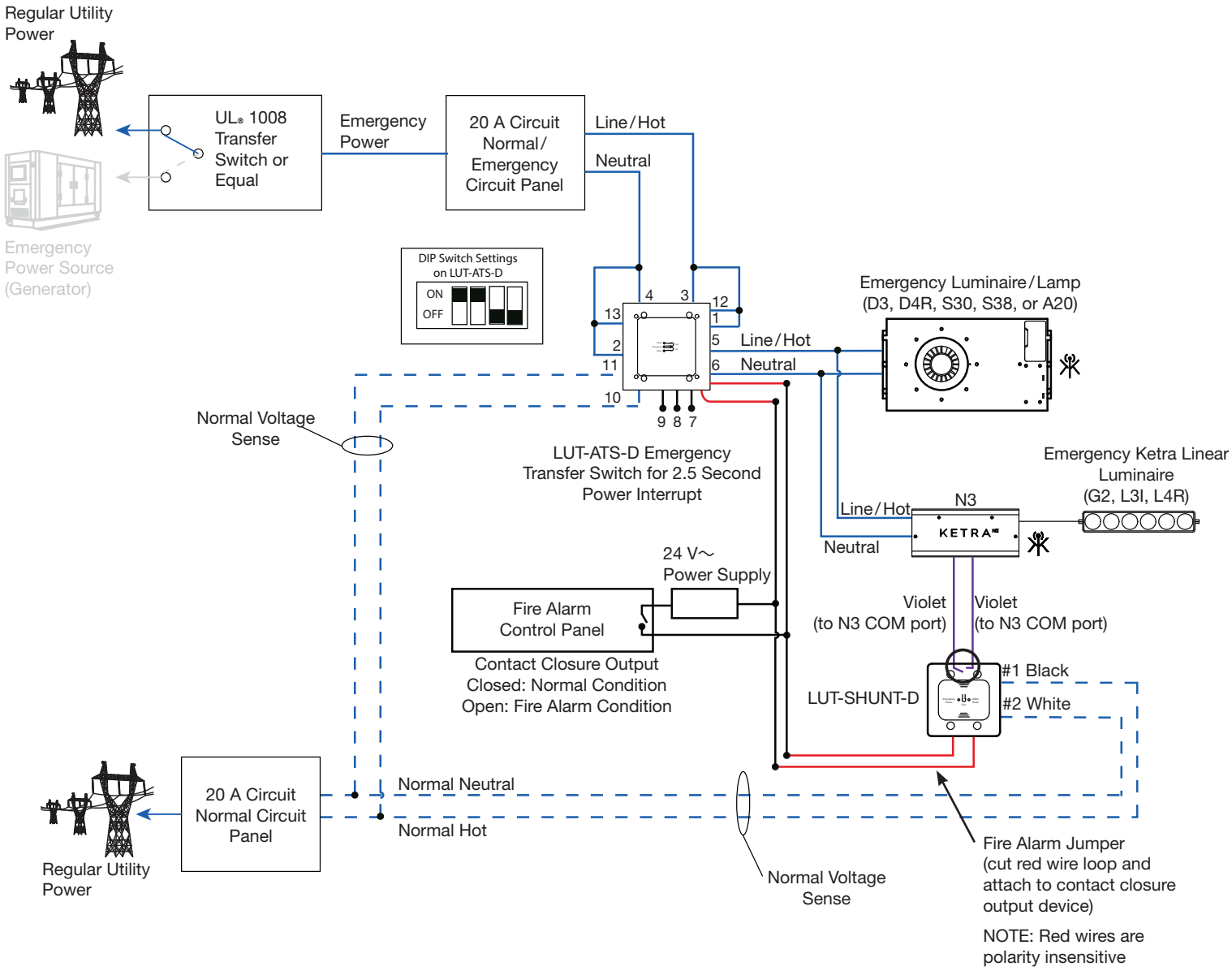

* The only difference between regular operation and fire alarm operation is the violet wires are open in the LUT-SHUNT-D as seen below.

Application D

Defining factors:

- Emergency power transfer greater than 2 seconds
- No fire alarm activation required
- Linear luminaires only

In the application where there is emergency power transfer greater than 2 seconds, no fire alarm activation is necessary and there is only linear luminaires for emergency, a LUT-SHUNT-D is required. Upon loss of normal power, emergency power will be restored with a greater than 2 second transfer time, the Ketra linear luminaires will automatically lock out and go to their programmed emergency light level. The LUT-SHUNT-D will monitor normal power and output a contact closure to the N3. When normal power is present the switch is in the closed state. When normal power is lost, the switch will be in the open state. Upon restoration of normal power, the switch in the LUT-SHUNT-D will close. The N3 will receive this contact closure and will broadcast a command for the Ketra linear luminaires to go back to regular operation.

Wiring Schematic

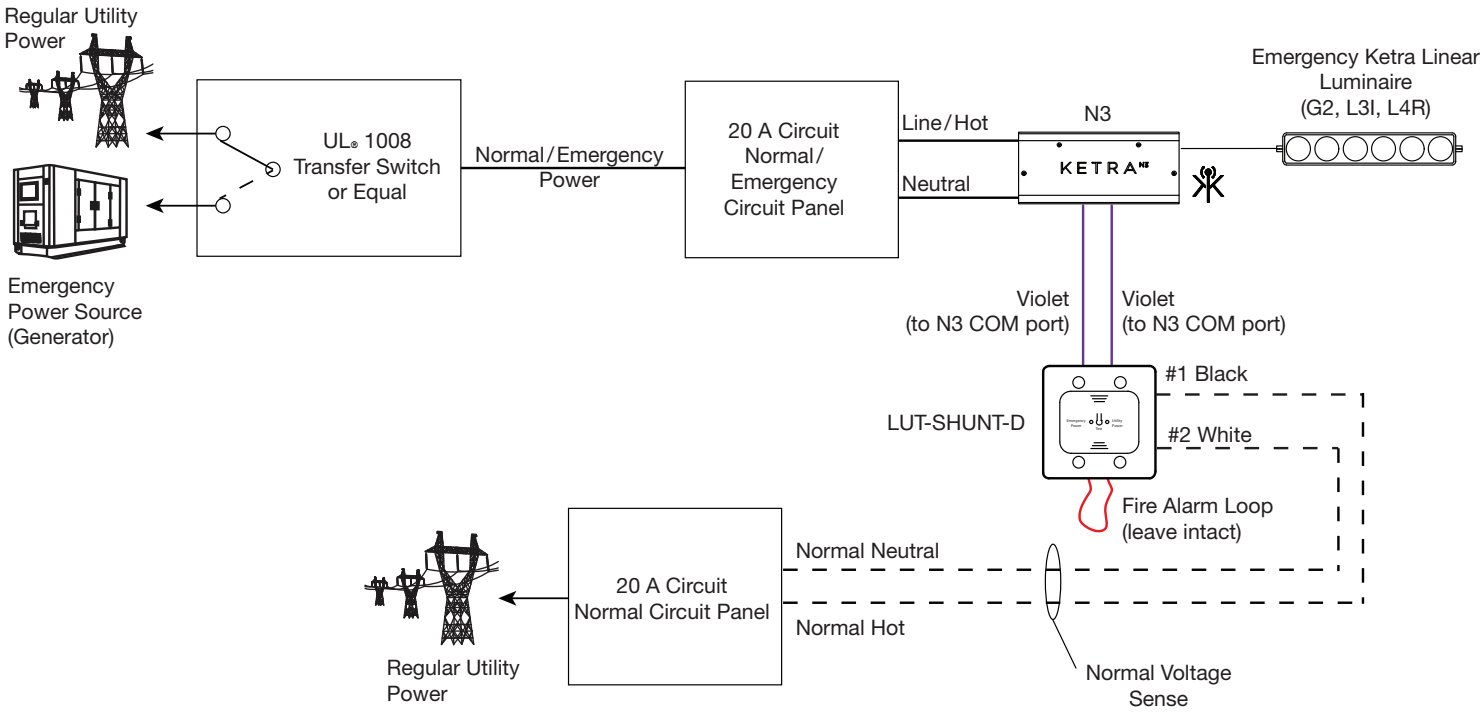

Application D (continued)

Regular Operation

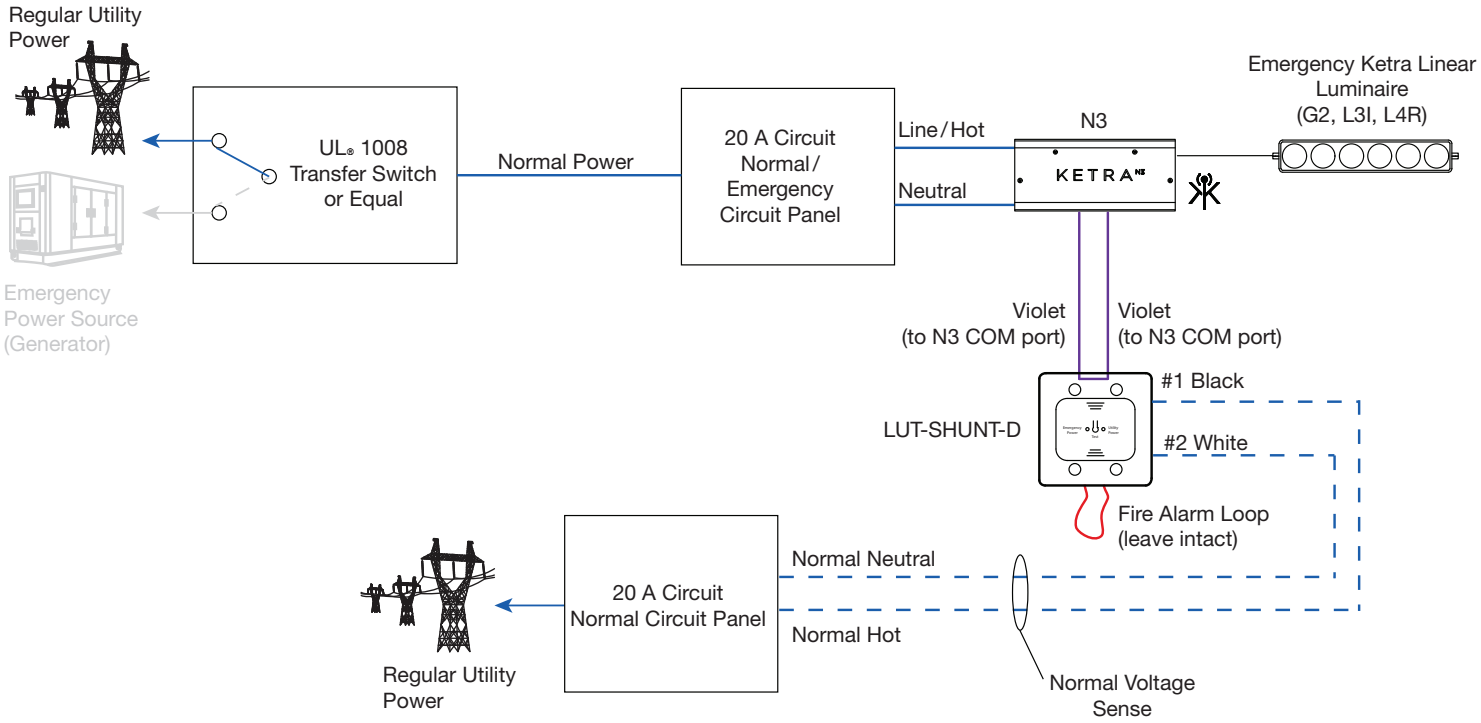

Application D (continued)

Emergency Operation

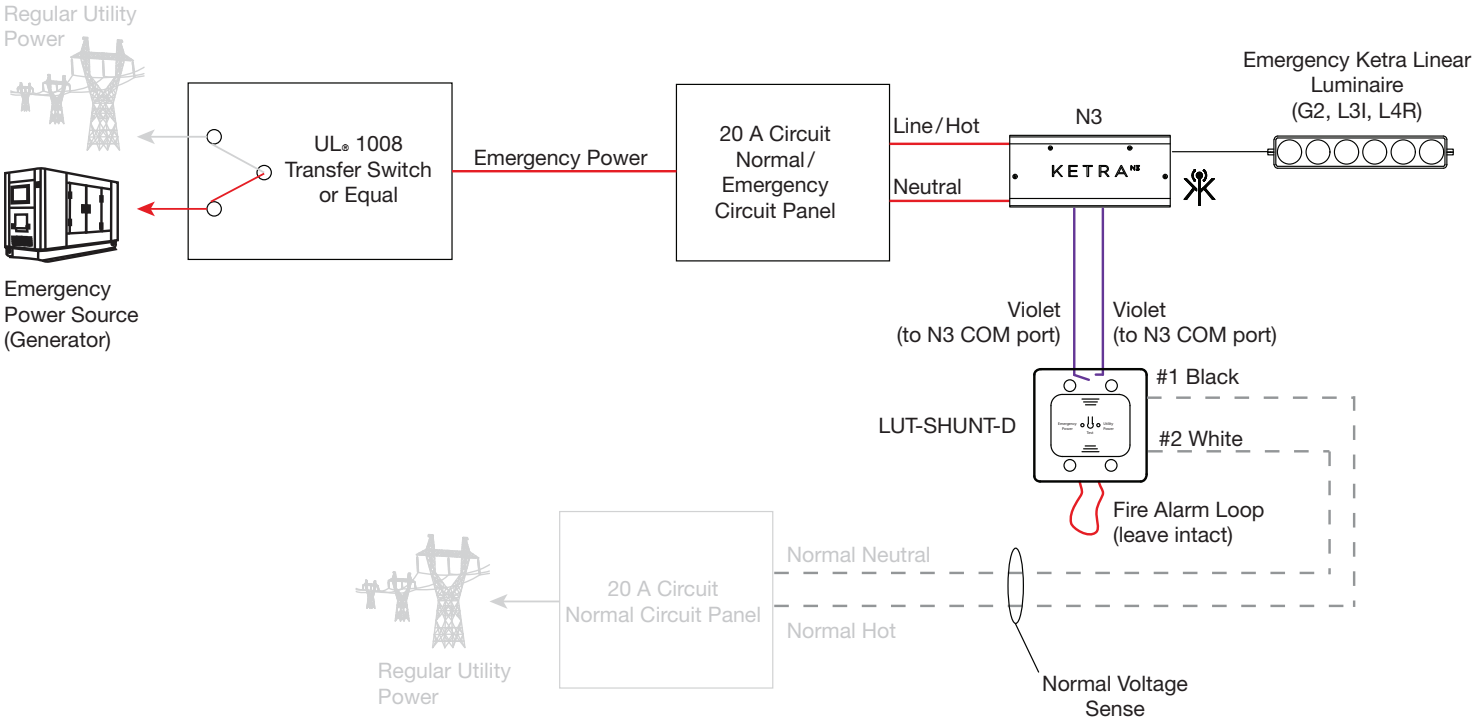

Application E

Defining factors:

- Emergency power transfer less than 2 seconds
- No fire alarm activation required
- Linear luminaires only

In the application where there is no fire alarm activation, the emergency power transfer is less than 2 seconds and there is only linear luminaires for emergency a LUT-ATS-D and LUT-SHUNT-D is required. Upon loss of normal power, emergency power will be restored quicker than 2 seconds and the Ketra linear luminaires will not lock out. Because of this, a LUT-ATS-D is used to create a 2.5 second power interrupt that will activate emergency mode and the linear luminaires will go to their programmed emergency light level. The LUT-SHUNT-D will monitor normal power and output a contact closure to the N3. When normal power is present the switch is in the closed state. When normal power is lost, the switch will be in the open state. Upon restoration of normal power, the switch in the LUT-SHUNT-D will close. The N3 will receive this contact closure and command the linear luminaires to go back to regular operation.

Wiring Schematic

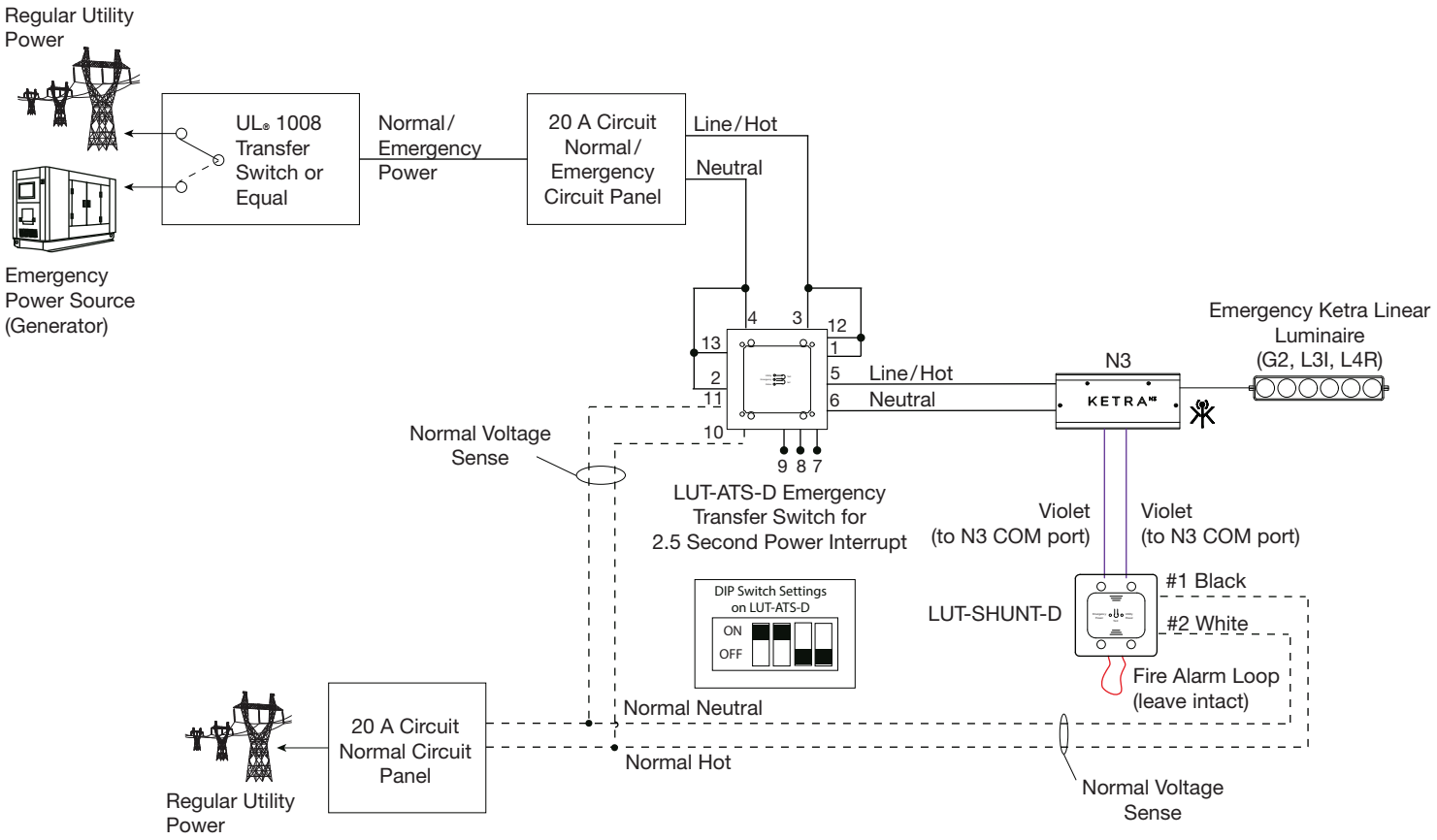

Application E (continued)

Regular Operation

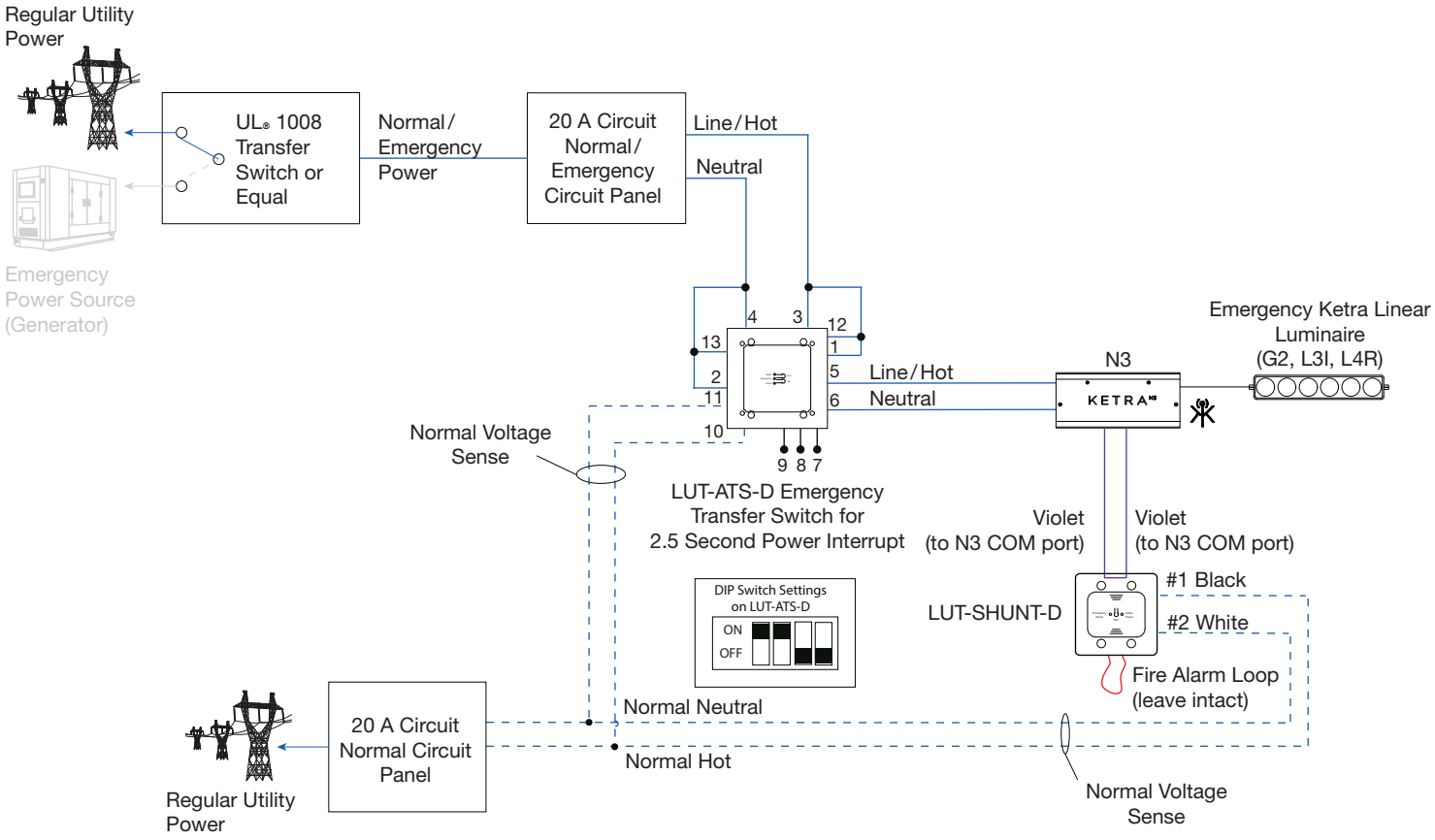

Application E (continued)

Emergency Operation

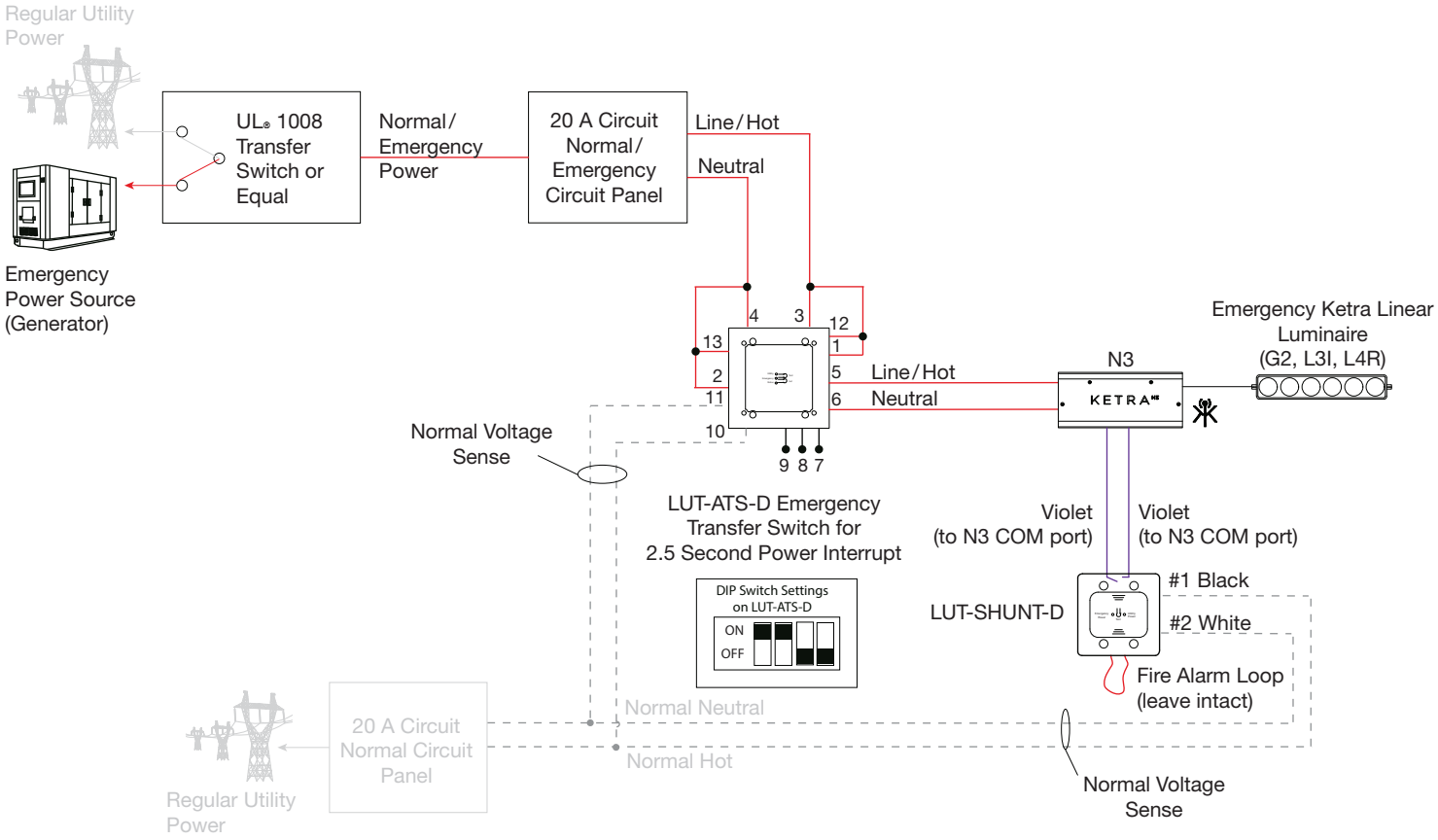

Application F

Defining factors:

- No loss of normal power
- Fire alarm activation
- Linear luminaires only

In the application where there is no loss of normal power and a fire alarm is triggered with only linear luminaires, the LUT-ATS-D and the LUT-SHUNT-D are required. Only one LUT-SHUNT-D per system is required. The quantity of LUT-ATS-D is dependent on the number of feeds supplying the Ketra emergency linear luminaires. There should be a 1:1 ratio of LUT-ATS-D to circuit breakers supplying Ketra emergency linear luminaires. The LUT-ATS-D and LUT-SHUNT-D have a fire alarm connection that needs to be wired to the device sending the signal which is typically a fire alarm control panel. With the DIP switches set appropriately, the LUT-ATS-D is used to create a 2.5 second power interruption that will automatically lock out Ketra linear luminaires and they will go to their programmed emergency light level. The LUT-SHUNT-D will change its contact closure state from closed to open upon fire alarm activation. When the fire alarm closure is restored, the N3 will receive the contact closure from the LUT-SHUNT-D and broadcast a command for the Ketra linear luminaires to go back to regular operation.

Wiring Schematic

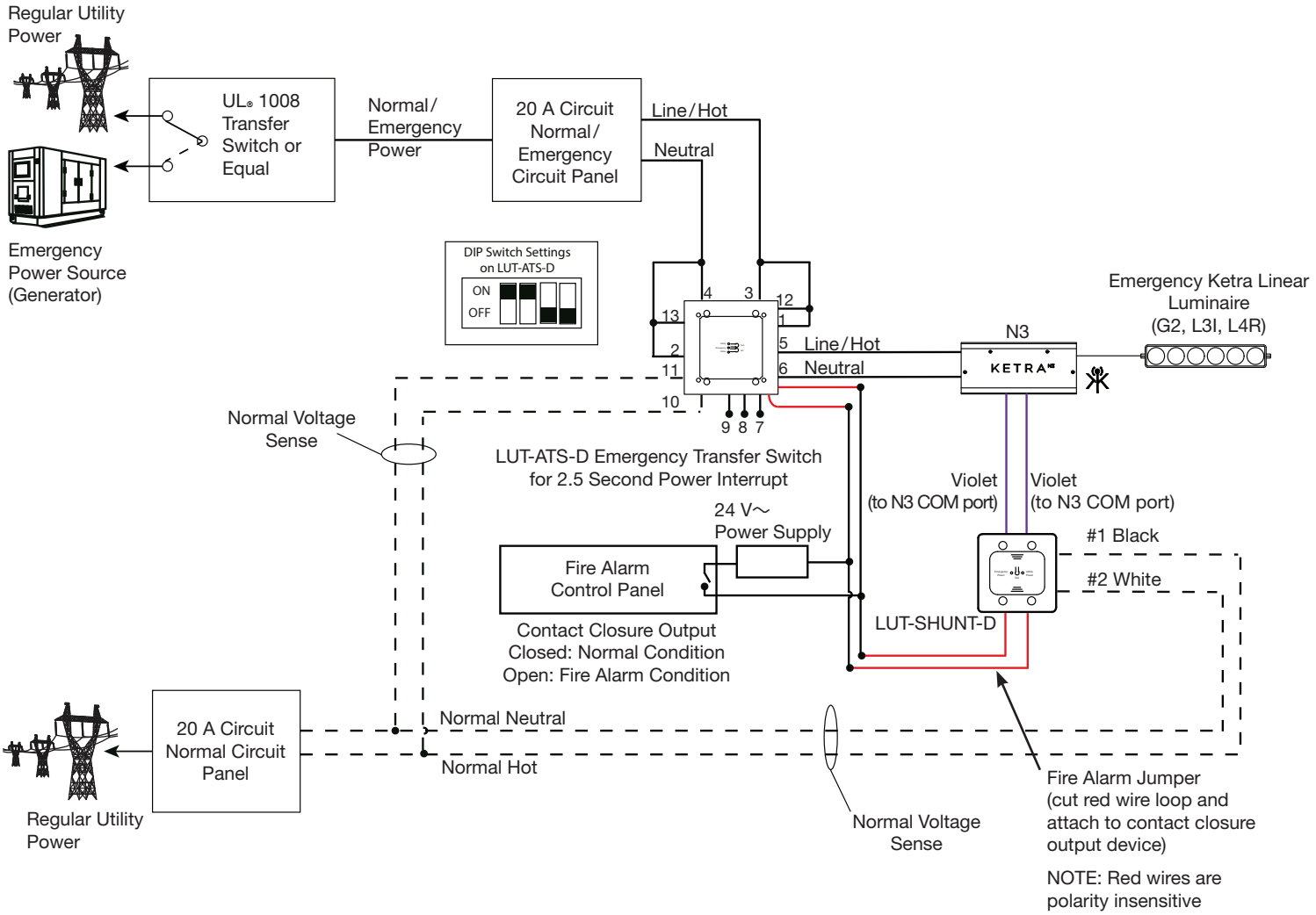

Application F (continued)

Regular Operation

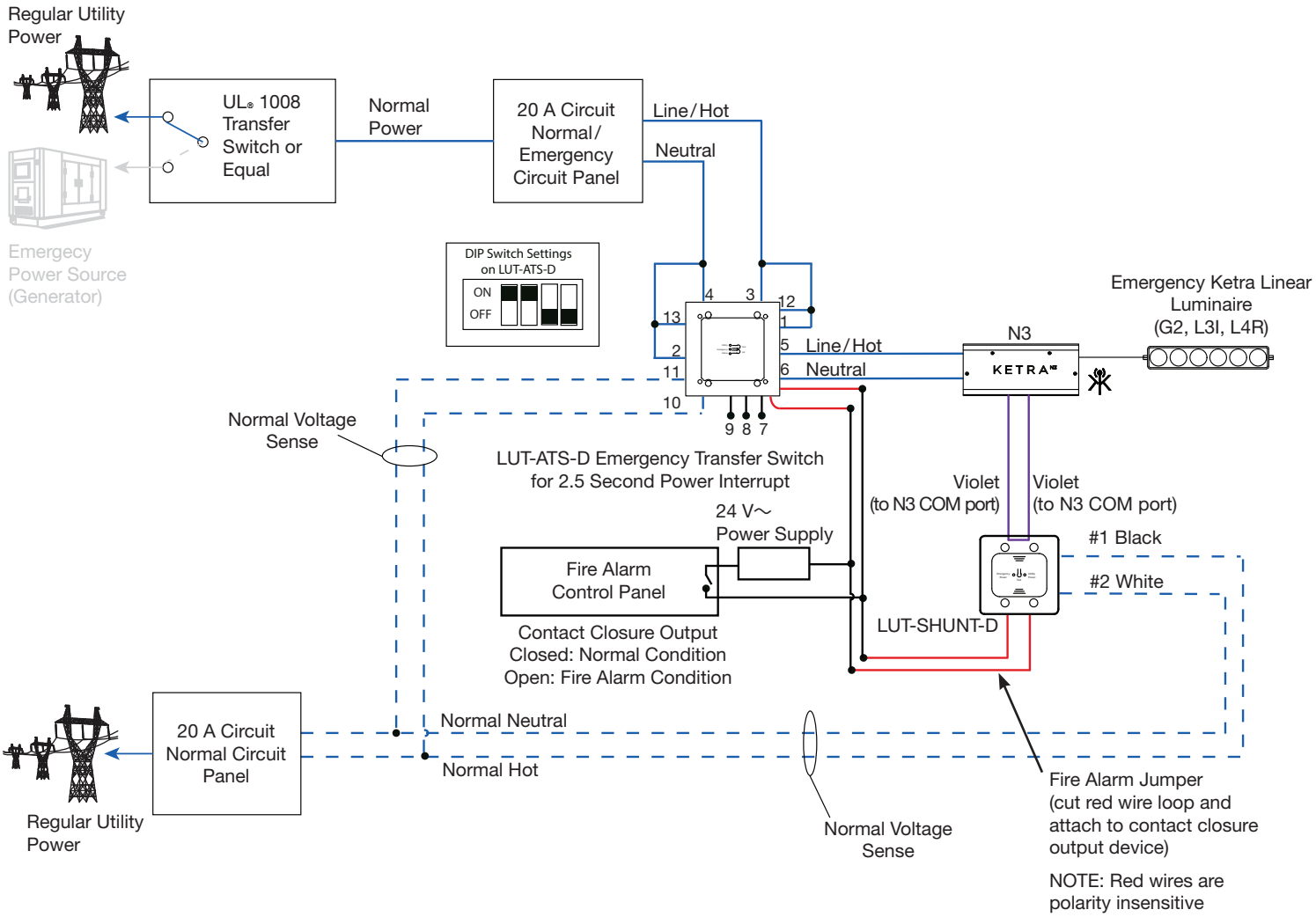

Application F (continued)

Fire Alarm Operation*

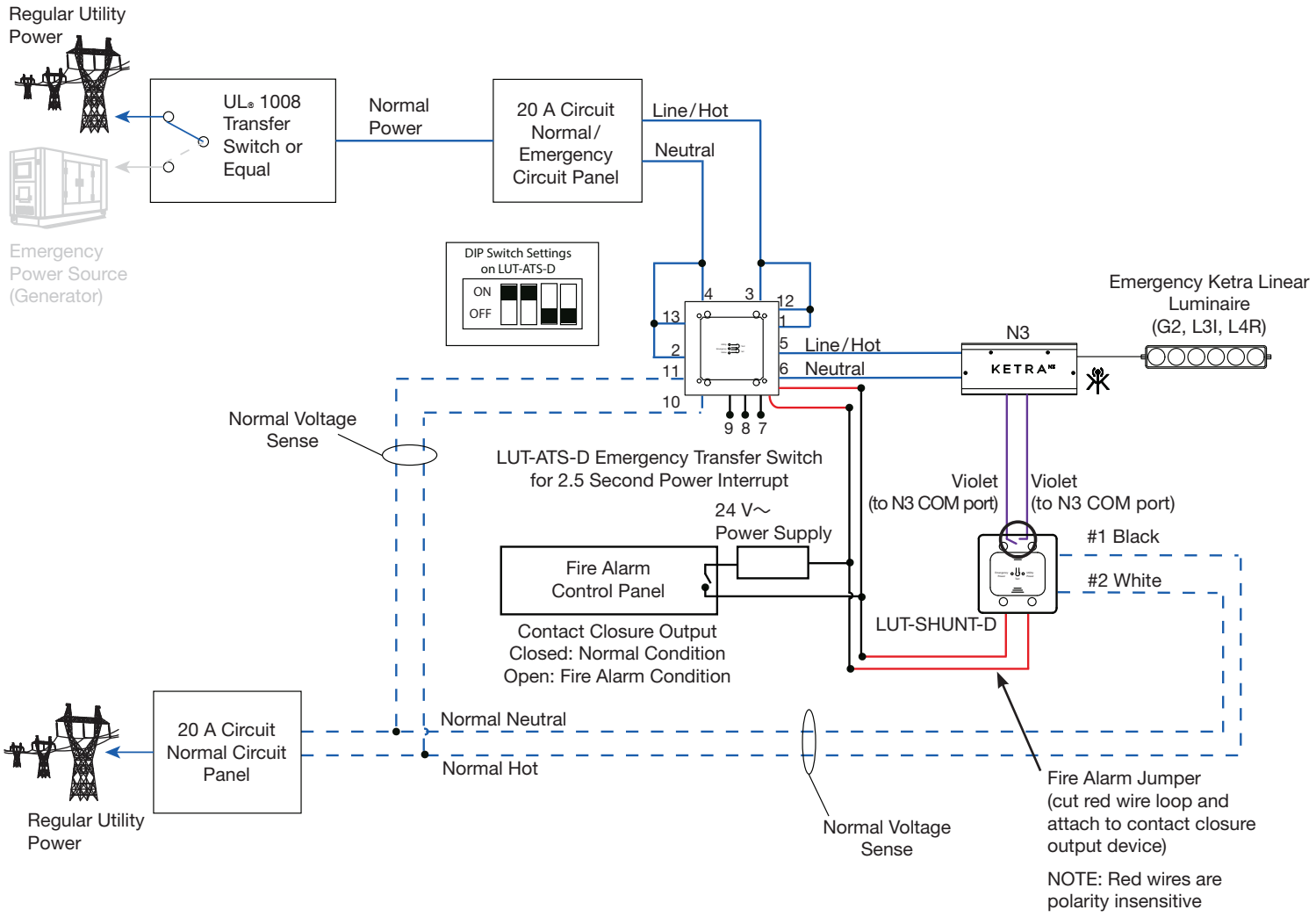

* The only difference between regular operation and fire alarm operation is the violet wires are open in the LUT-SHUNT-D as seen below.

Application G

Defining factors:

- Emergency power transfer greater than 2 seconds
- No fire alarm activation required
- Luminaires/lamps only

In the application where there is emergency power transfer is greater than 2 seconds, no fire alarm activation is necessary and only luminaires/lamps a LUT-SHUNT-D and N3 are required. Upon loss of normal power, emergency power will be restored with a greater than 2 second transfer time. The Ketra luminaires/lamps will automatically lock out and go to their programmed emergency light level. The LUT-SHUNT-D will monitor normal power and output a contact closure to the N3. When normal power is present the switch is in the closed state. When normal power is lost, the switch will be in the open state. Upon restoration of normal power, the switch in the LUT-SHUNT-D will close. The N3 will receive this contact closure and will broadcast a command for the Ketra luminaires/lamps to go back to regular operation.

Wiring Schematic

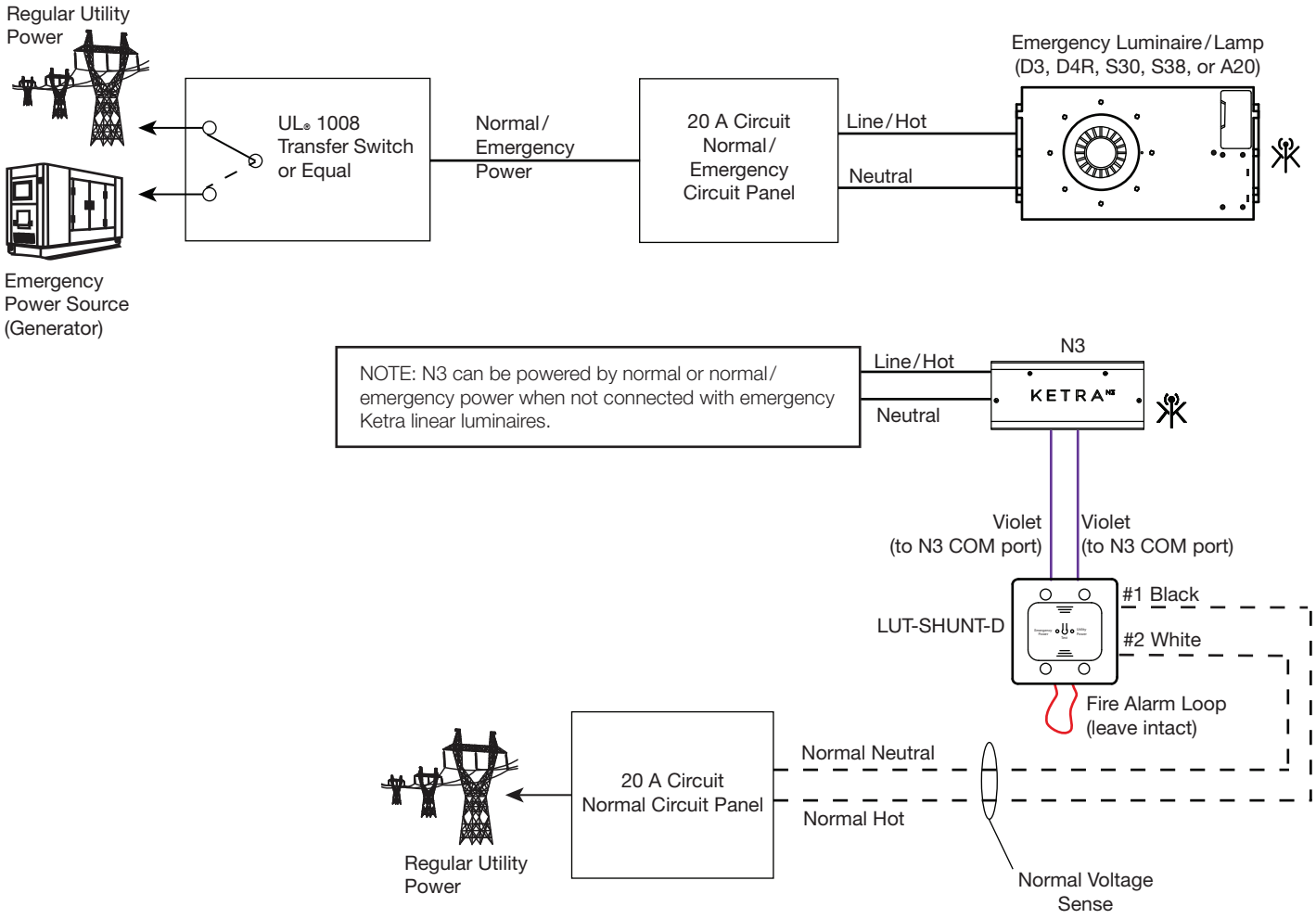

Application G (continued)

Regular Operation

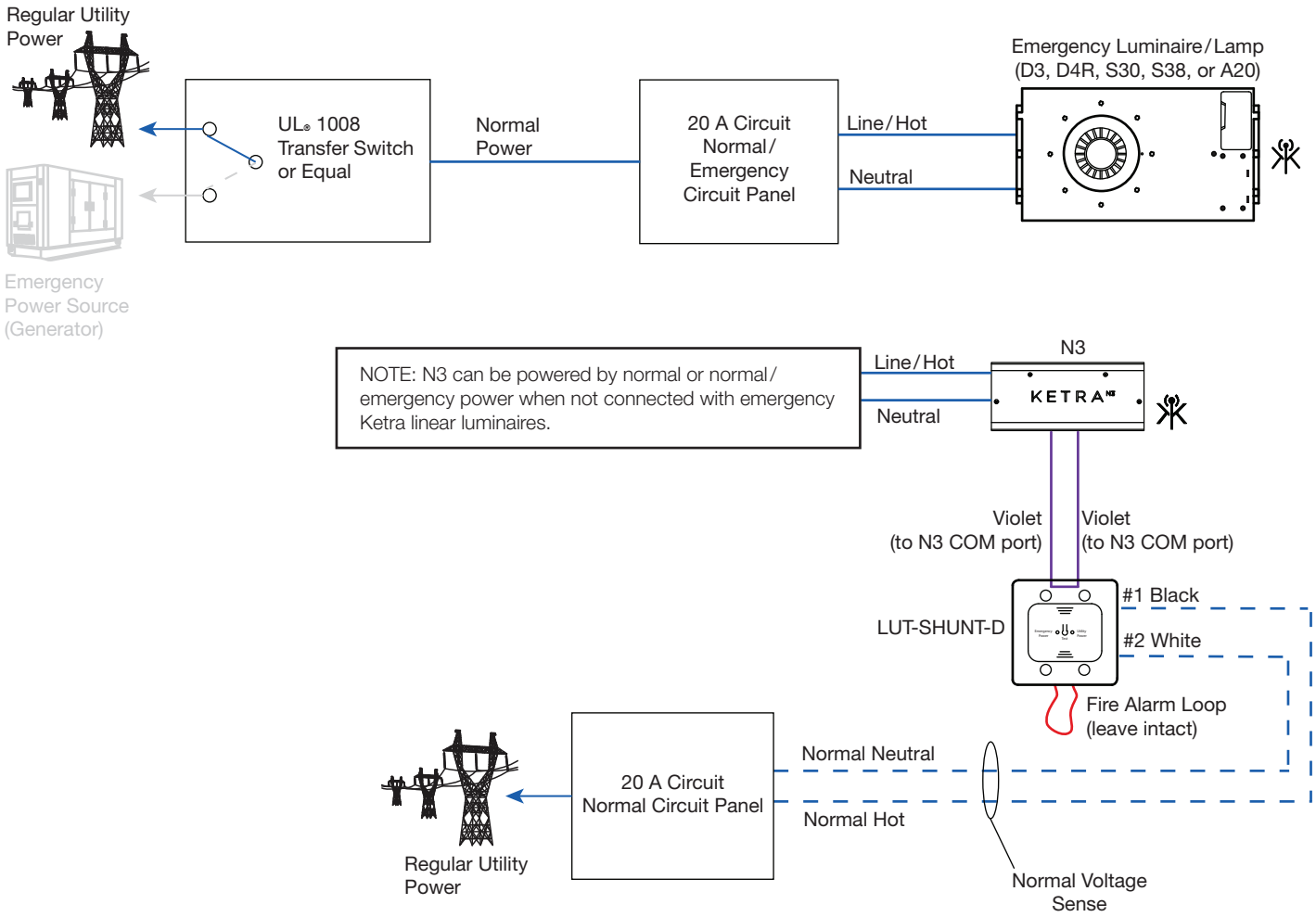

Application G (continued)

Regular Operation

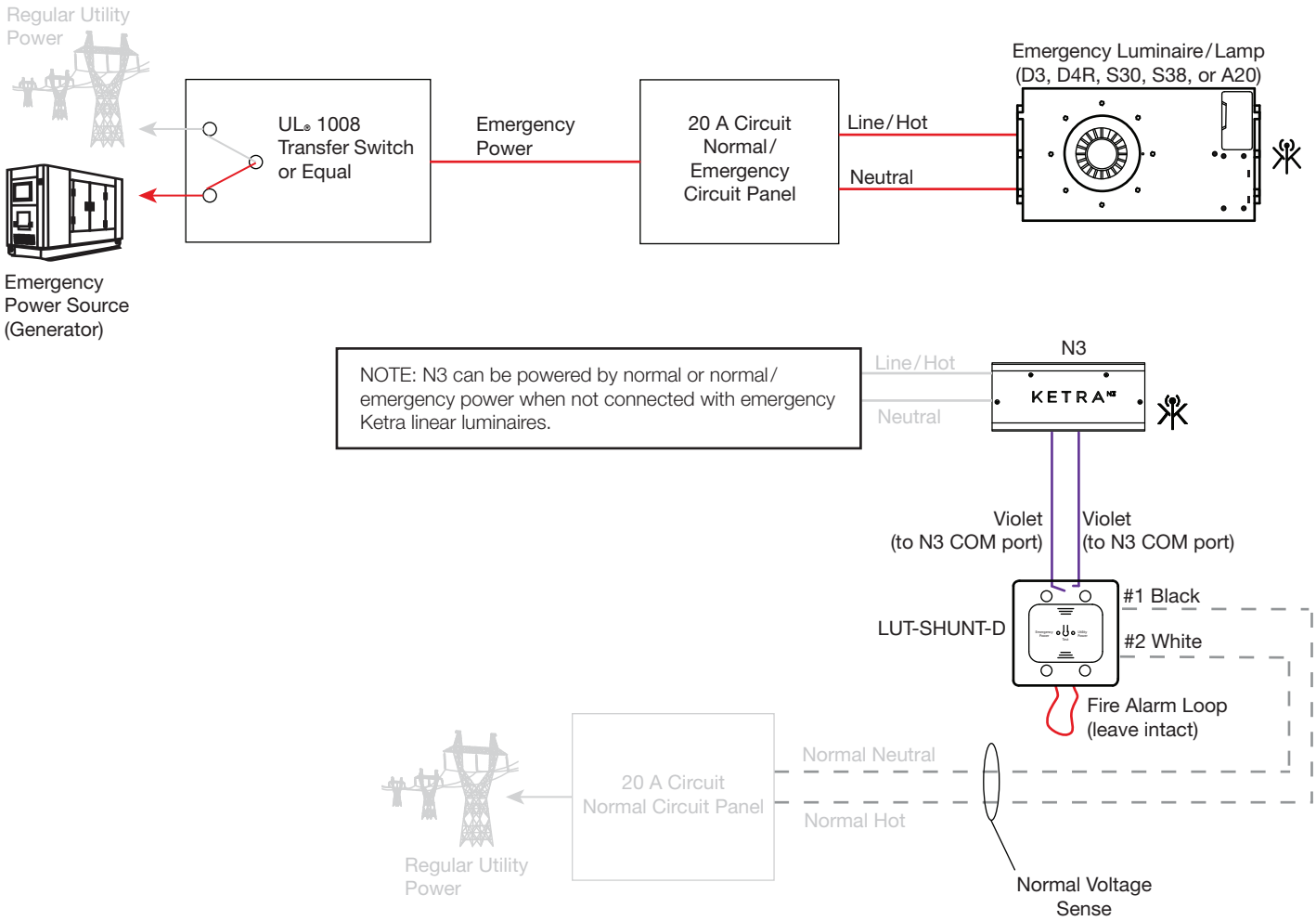

Application H

Defining factors:

- Emergency power transfer less than 2 seconds
- No fire alarm activation required
- Luminaires/lamps only

In the application where emergency power transfer is less than 2 seconds, no fire alarm activation is necessary and only luminaires/lamps, an N3, LUT-ATS-D and LUT-SHUNT-D are required. Only 1 LUT-SHUNT-D per system is required. The quantity of LUT-ATS-D is dependent on the number of feeds supplying the Ketra emergency luminaires/lamps. There should be a 1:1 ratio of LUT-ATS-D to circuit breakers supplying Ketra emergency luminaires/lamps. Upon loss of normal power, emergency power will be restored less than 2 seconds later. This is not enough time to activate emergency lockout mode in the Ketra luminaires/lamps. Because of this, the LUT-ATS-D with DIP switches set appropriately is used to create a 2.5 second power interruption that will automatically lock out Ketra luminaires/lamps and they will go to their programmed emergency light level. The LUT-SHUNT-D will monitor normal power and output a contact closure to the N3. When normal power is present the switch is in the closed state. When normal power is lost, the switch will be in the open state. Upon restoration of normal power, the switch in the LUT-SHUNT-D will close. The N3 will receive this contact closure and will broadcast a command for the Ketra luminaires/lamps to go back to regular operation.

Wiring Schematic

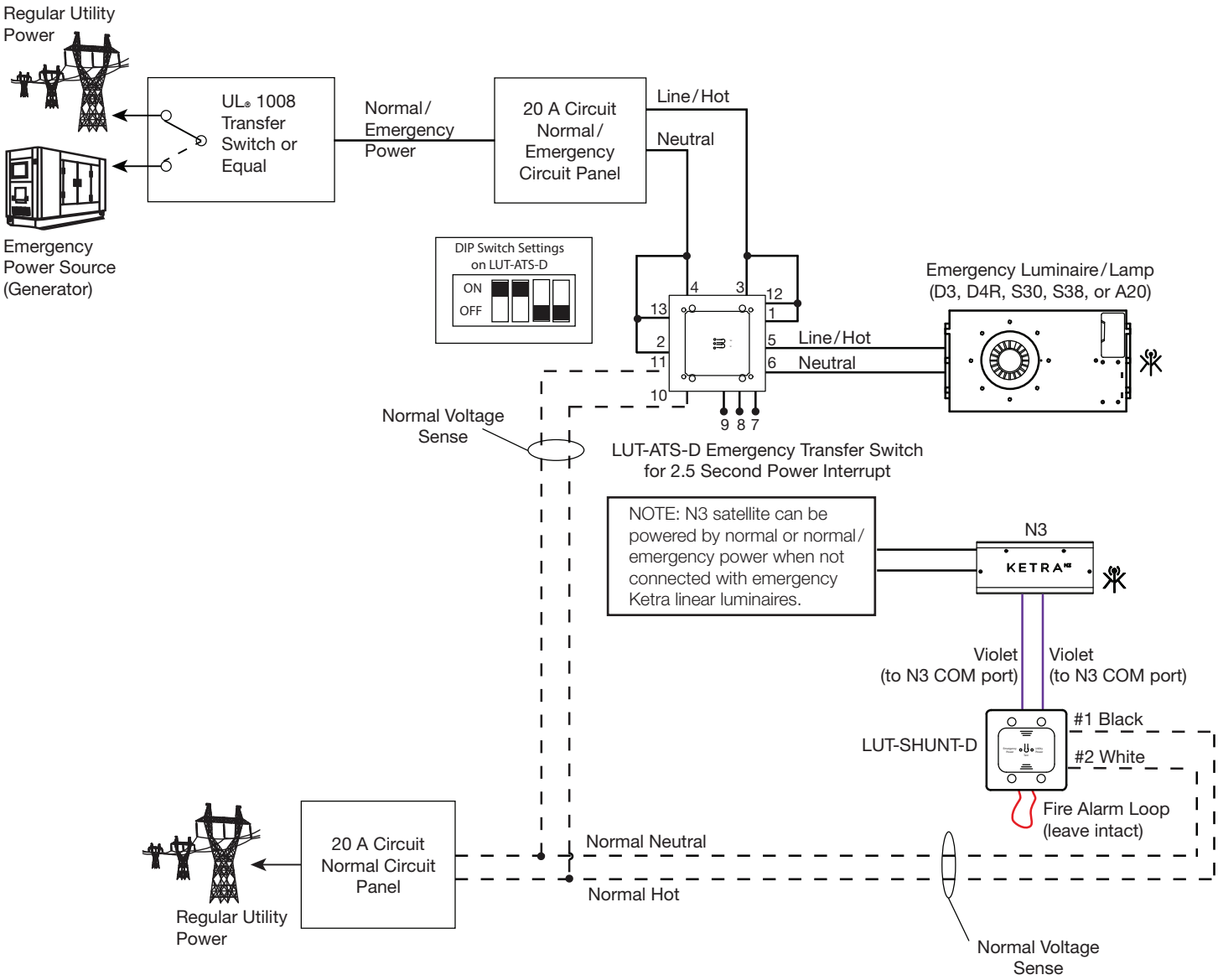

Application H (continued)

Regular Operation

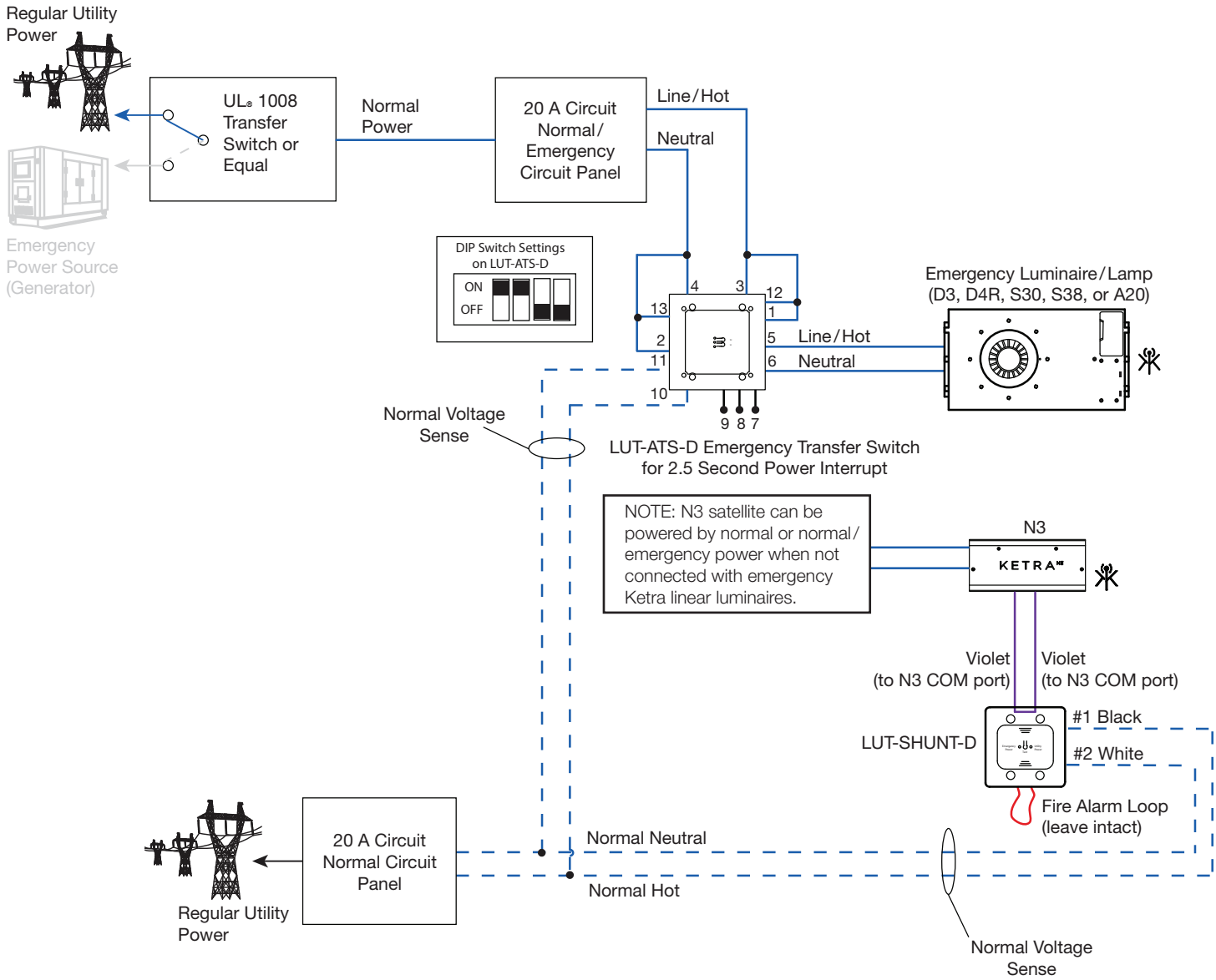

Application H (continued)

Emergency Operation

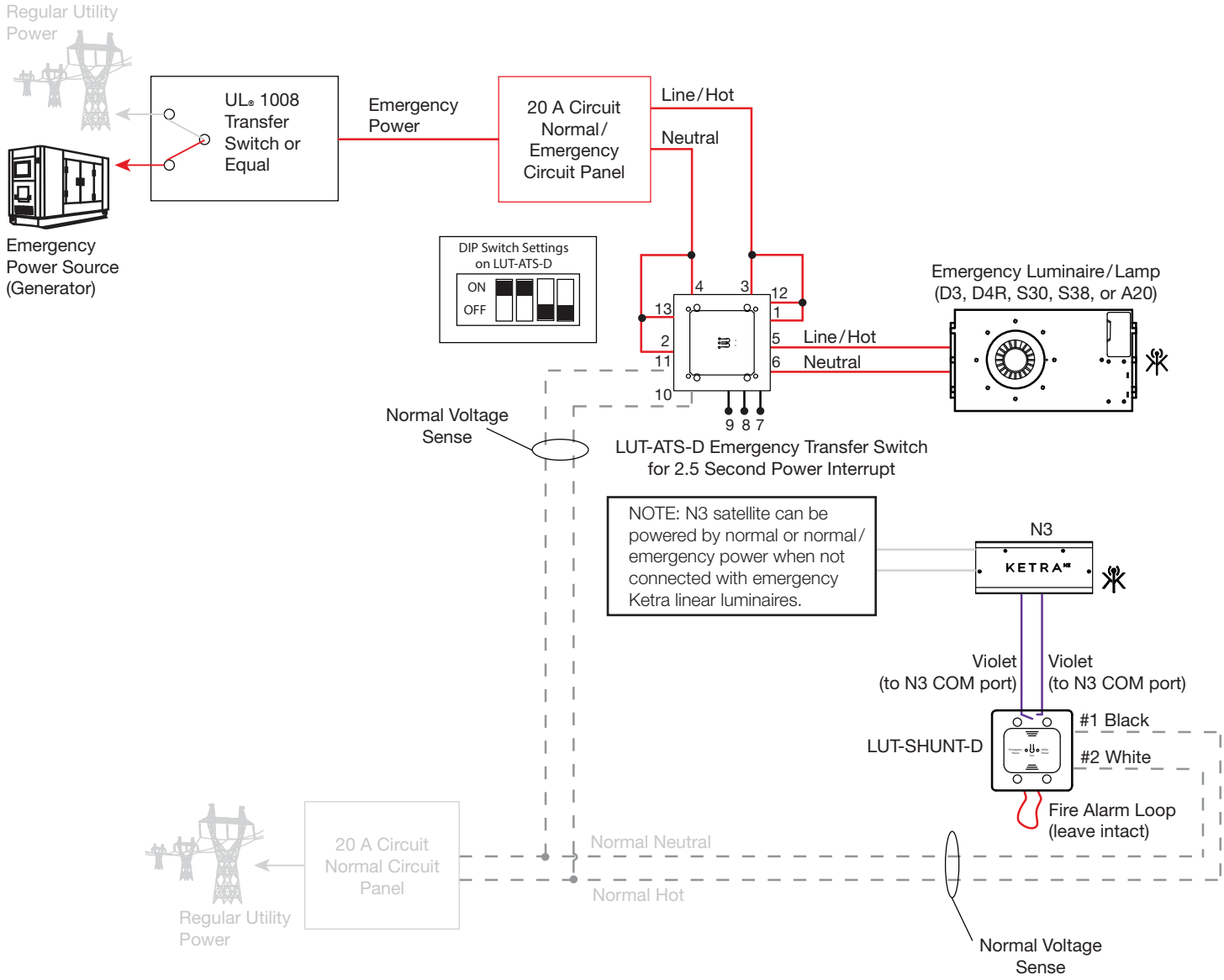

Application I

Defining factors:

- Emergency power transfer less than 2 seconds
- Fire alarm activation required
- Luminaires/lamps only

In the application where there is no loss of normal power and a fire alarm is triggered with only luminaires/lamps, an N3, LUT-ATS-D and the LUT-SHUNT-D are required. Only 1 N3 and LUT-SHUNT-D per system is required. The quantity of LUT-ATS-D is dependent on the number of feeds supplying the Ketra luminaires/lamps expected to respond to the fire alarm. The LUT-ATS-D and LUT-SHUNT-D have a fire alarm connection that needs to be wired to the device sending the signal which is typically a fire alarm control panel. With the DIP switches set appropriately, the LUT-ATS-D is used to create a 2.5 second power interruption that will automatically lock out Ketra luminaires/lamps and they will go to their programmed emergency light level. The LUT-SHUNT-D will change its contact closure state from close to open upon fire alarm activation. When the fire alarm closure is restored, the N3 will receive the contact closure from the LUT-SHUNT-D and broadcast a command for the Ketra luminaires/lamps to go back to regular operation.

Wiring Schematic

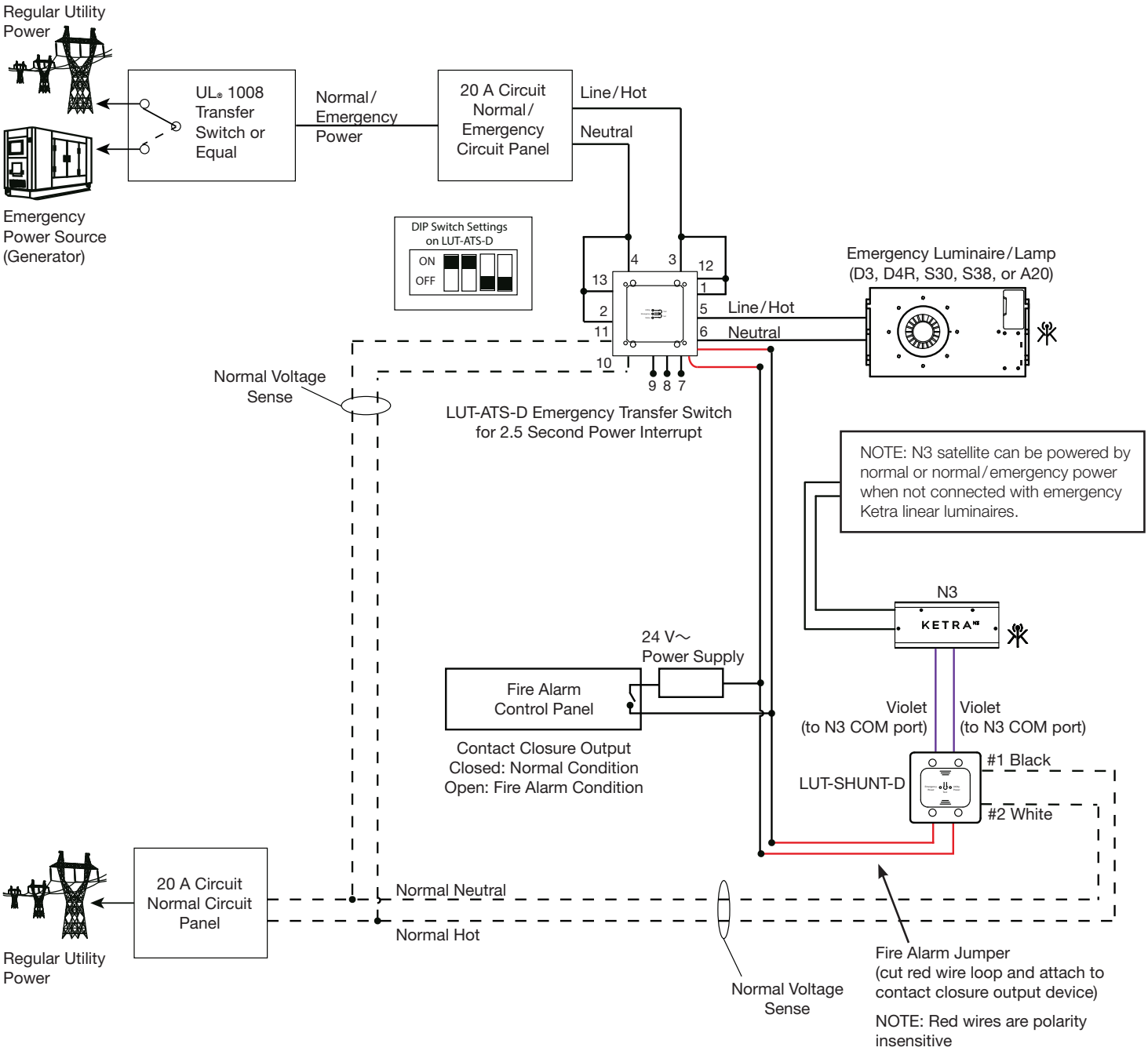

Application I (continued)

Regular Operation

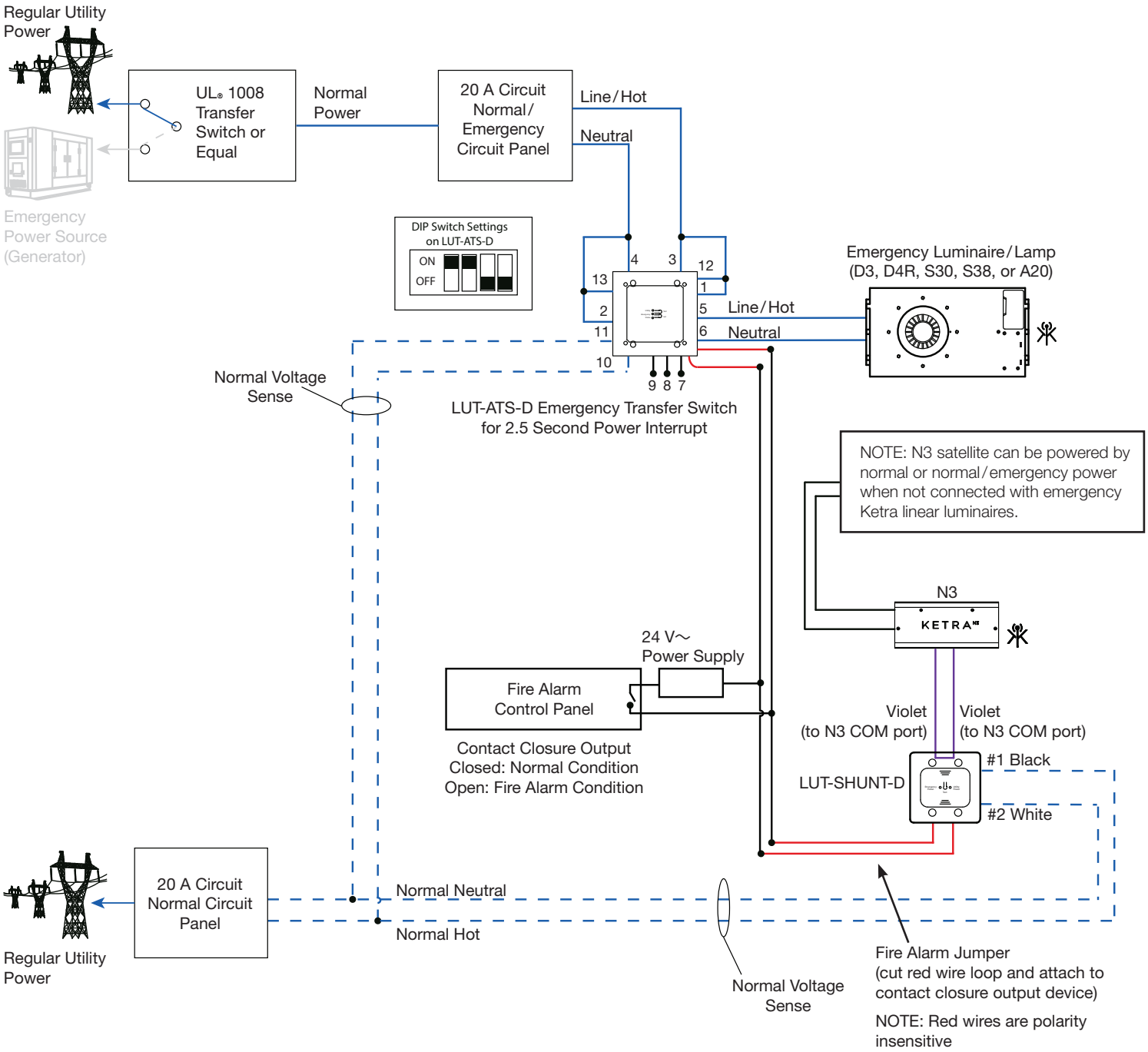

Application I (continued)

Fire Alarm Operation*

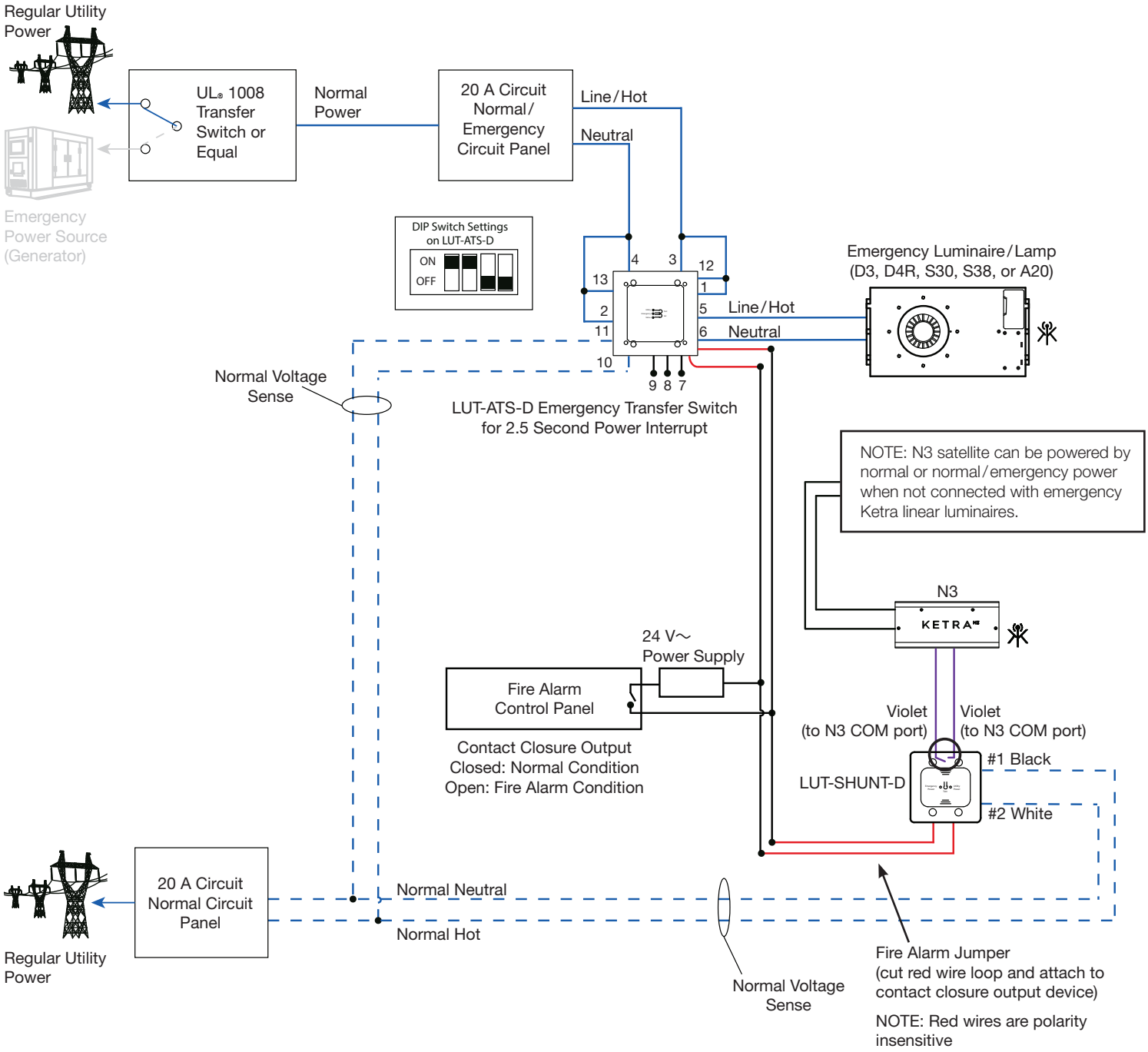

* The only difference between regular operation and fire alarm operation is the violet wires are open in the LUT-SHUNT-D as seen below.

Lutron Contact Numbers

WORLD HEADQUARTERS
USA
Lutron Electronics Co., Inc.
7200 Suter Road
Coopersburg, PA 18036-1299
TEL: +1.610.282.3800
FAX: +1.610.282.1243

support@lutron.com

www.lutron.com/support

North & South America
Customer Assistance
USA, Canada, Caribbean:
1.844.LUTRON1 (1.844.588.7661)
Mexico:
+1.888.235.2910
Central/South America:
+1.610.282.6701

UK AND EUROPE:
Lutron EA Limited
125 Finsbury Pavement
4th floor, London EC2A 1NQ
United Kingdom
TEL: +44.(0)20.7702.0657
FAX: +44.(0)20.7480.6899
FREEPHONE (UK): 0800.282.107
Technical Support: +44.(0)20.7680.4481

lutronlondon@lutron.com

ASIA:
Lutron GL Ltd.
390 Havelock Road
#07-04 King's Centre
Singapore 169662
TEL: +65.6220.4666
FAX: +65.6220.4333
Technical Support: 800.120.4491

lutronsea@lutron.com

Asia Technical Hotlines
Northern China: 10.800.712.1536
Southern China: 10.800.120.1536
Hong Kong: 800.901.849
Indonesia: 001.803.011.3994
Japan: +81.3.5575.8411
Macau: 0800.401
Taiwan: 00.801.137.737
Thailand: 001.800.120.665853
Other Countries: +65.6220.4666

Lutron Electronics Co., Inc.
7200 Suter Road
Coopersburg, PA 18036-1299 U.S.A.
08/2020 P/N 048730 Rev. C