Mitsubishi Electric Cooling & Heating System VRF - Lutron Palladiom Thermostat Integration

MITSUBISHI ELECTRIC
COOLING & HEATING

Table of Contents

1.0 Overview

Lutron Electronics and Mitsubishi Electric Cooling & Heating (Mitsubishi Electric), a leading supplier of Variable Refrigerant Flow (VRF) technology, have integrated a sleek, intuitive design of the Palladiom thermostat for control of Mitsubishi Electric systems. This integration is achieved by using a combination of a Mitsubishi Electric thermostat interface along with Lutron hardware as follows:

- Mitsubishi PAC-US444CN-1 with a Lutron Fan Coil Unit controller or the HomeWorks QS Palladiom HVAC controller and a myRoom or HomeWorks Palladiom thermostat

  Notes: 1. This integration is only available if the indoor unit supports a CN105/CN92 connector.
  2. myRoom FCU controller SMC53 can be used to control a Mitsubishi PAC-US444CN-1.

OR

- Mitsubishi A1M with a myRoom or HomeWorks QS Palladiom thermostat

  Notes: 1. This integration is only available if the indoor unit supports a CN105/CN92 connector.
  2. When the Palladiom thermostat is connected to an A1M controller to control Mitsubishi VRF equipment, external thermostats must not be used. Any setting changes made using an external thermostat (e.g., fan mode or temperature setpoint) will be overwritten by the Palladiom thermostat.
  3. The Palladiom thermostat cannot receive any HVAC errors from the Mitsubishi unit.
  4. The Palladiom thermostat needs the zone temperature to be reported by the Mitsubishi equipment and does not use its own internal temperature sensor.

2.0 Mitsubishi PAC-US444CN-1

2.1 System Topology

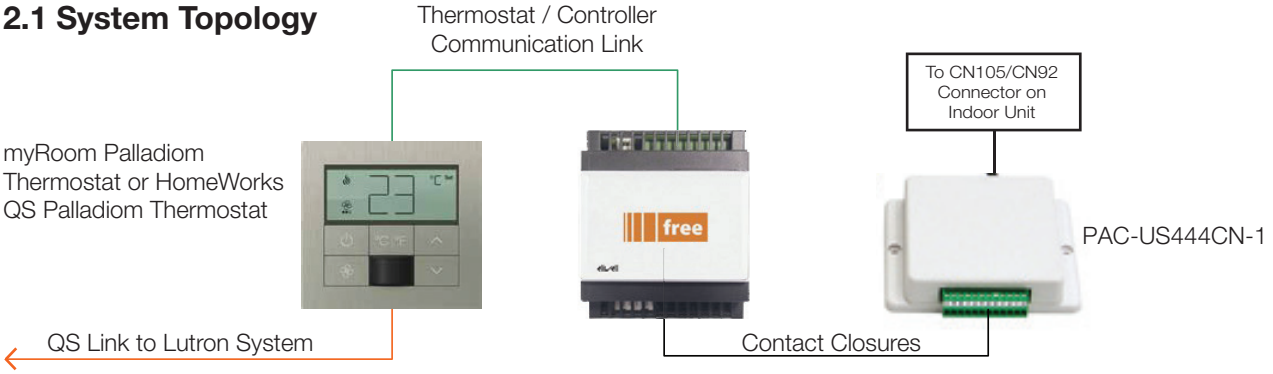

2.2 Wiring Diagrams (SMC55 Controller with PAC Interface)

Heat and Cool

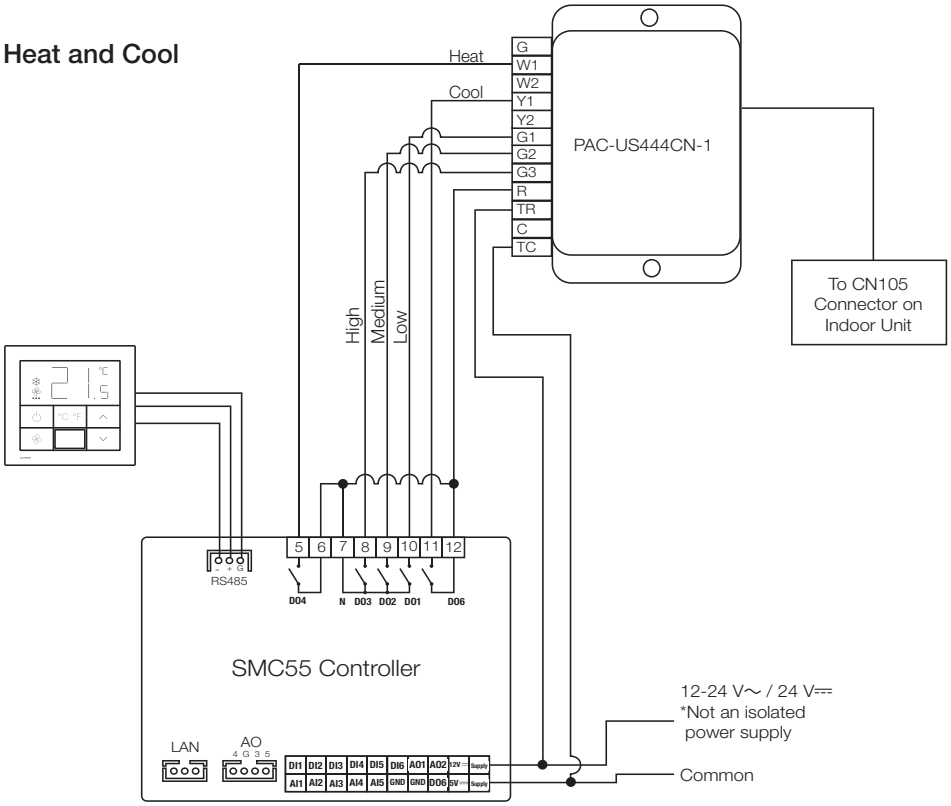

Heat Only

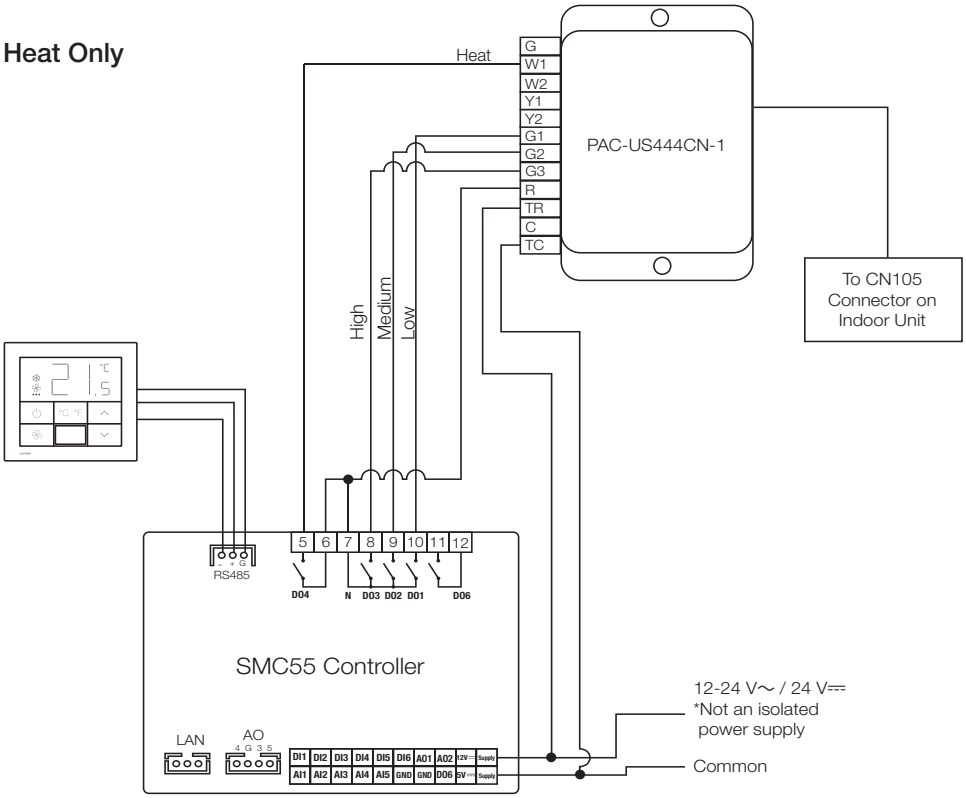

2.2 Wiring Diagrams (SMC55 Controller with PAC Interface) *(continued)*

Cool Only

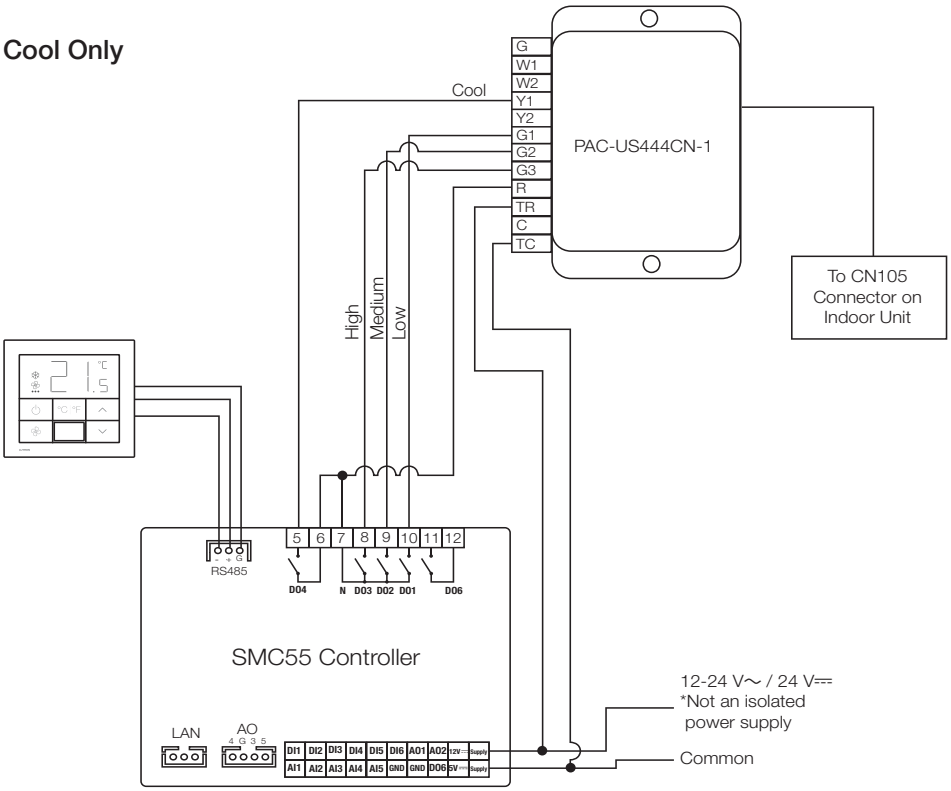

- When using the SMC55 controller in heat or cool only configuration, the SMC55 controller must be configured for heat only or cool only. By default the controller is set to both heat and cool.
- The PAC-US444CN-1 interface should be supplied by a Mitsubishi distributor.
- Use one PAC-US444CN-1 interface per indoor unit controlled by the Palladiom thermostat.
- 24 V∼/24 V⎓ power supply is required and field supplied by others.
- Use 18 AWG (1.0 mm^2) wire between PAC-US444CN-1 and Lutron SMC55 Controller.
- The Lutron system and Palladiom thermostat must be programmed by a trained Lutron service engineer or an authorized distributor.

2.3 DIP Switch Configuration for PAC-US444CN-1

SW2-1 OFF
SW2-2 OFF
SW2-3 OFF
SW2-4 OFF
SW2-5 ON
SW2-6 ON
SW1-1 ON
SW1-2 ON
SW1-3 OFF
SW1-4 OFF

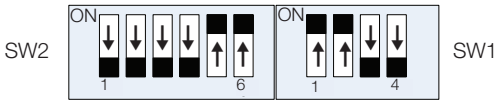

Note: A Mitsubishi Electric trained HVAC professional may change the DIP switch configurations based on user preference.

2.4. Configuring the Thermostat

Enter the controller selection menu on the Palladiom thermostat and set the correct controller and controller address for the SMC55. For directions refer to the thermostat install guide.

3.0 Mitsubishi A1M

3.1 System Typology

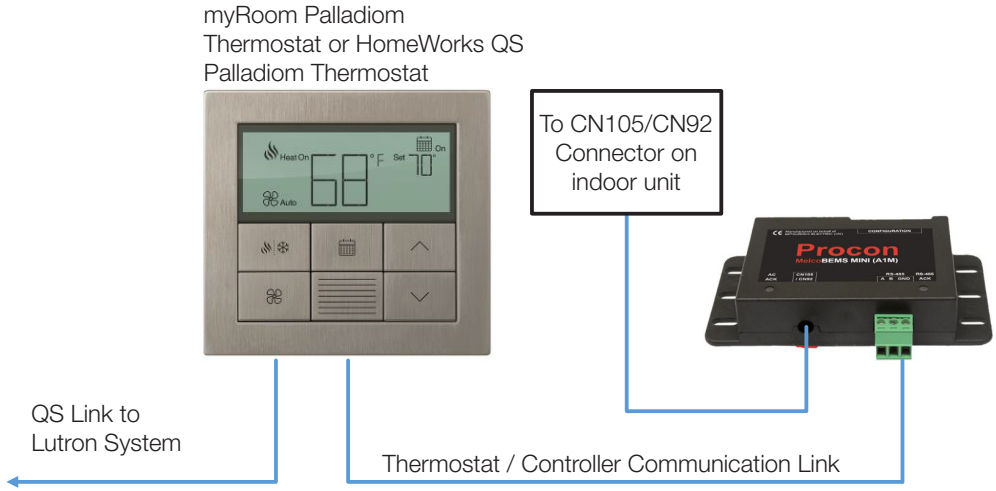

3.2 Wiring Diagram (myRoom or HomeWorks QS Palladiom Thermostat with A1M Controller)

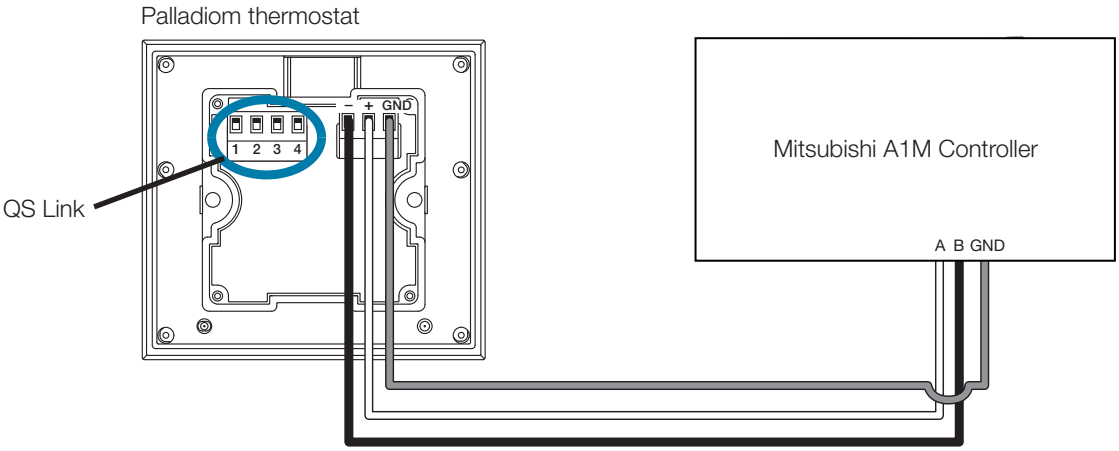

Palladiom Thermostat	A1M Interface
$\overline{\text{MUX}}$	B
MUX	A
COM	GND

3.3 DIP Switch Configuration for A1M

Setting DIP switches 1-5 will determine the Modbus address for the A1M controller. After the DIP switches are changed, the A1M must be power cycled for the address change to take effect. DIP switches 6-8 must be set as shown below to ensure the Palladiom thermostat communicates correctly.

DIP SW6 - ON
DIP SW7 - ON
DIP SW8 - OFF

3.1. Modbus Slave ID

Any Modbus Slave ID in the range 1 – 31 can be chosen using switches 1 – 5. The address is set in binary, where the switch positions have the following values:

Switch number	Value when switch is set to ON
1	1
2	2
3	4
4	8
5	16

To get the Slave ID, add together the value for each switch set to ON. For example, to set address 13, set switches 1, 3 and 4 ON (1 + 4 + 8 = slave ID 13).

Please note: Each Procon A1M connected to the same RS-485 network must be set to a unique address.

3.4 Configuring the Thermostat

Follow the directions on the thermostat install guide to enter the controller selection menu on the Palladiom thermostat and set the correct controller and controller address for the A1M.

3.5 Setting up a myRoom Thermostat in a myRoom Database

While the Mitsubishi A1M is not available on the design tab in myRoom GUI software, it can still be integrated with the thermostat. To ensure the thermostat can communicate with the A1M controller, select the **Control Type** and **Fan Coil Unit Controller** as shown below.

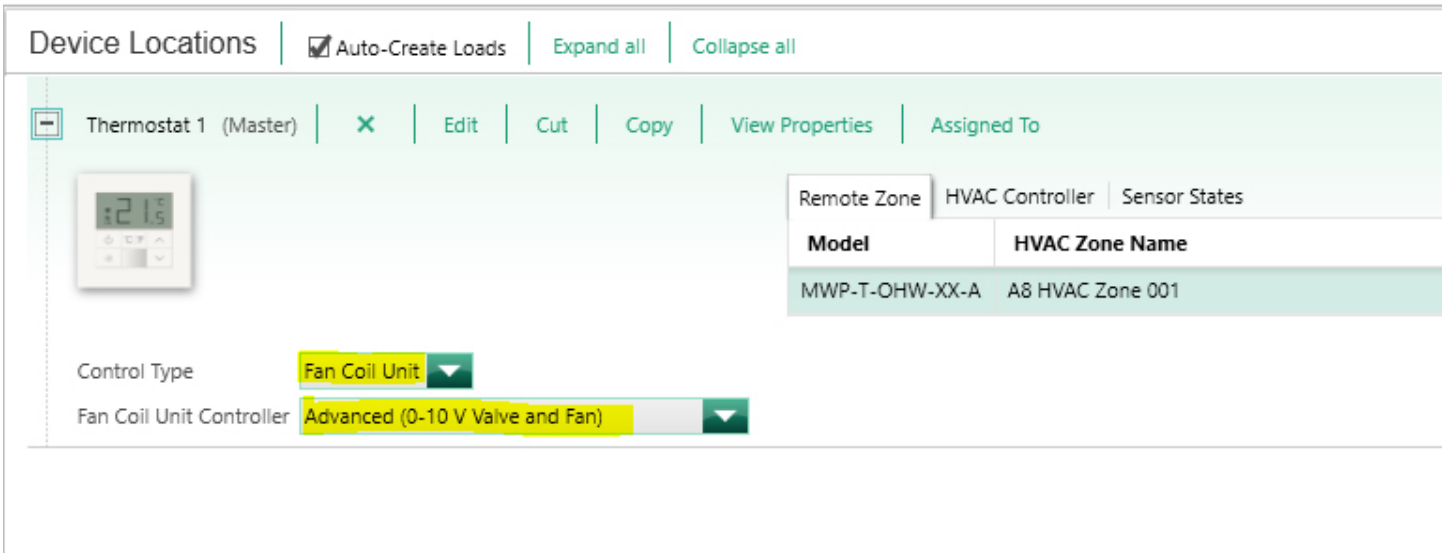

3.6 Setting up a HomeWorks Thermostat in HomeWorks Database (version 12.0 or newer)

To add Mitsubishi equipment to the database, go to the ***design*** tab of the software and use the drop-down menu to select ***equipment***. Next, find the ***3rd Party HVAC*** device in the toolbox and click on "+" to add the device using HomeWorks 12.0 or newer.

NOTE: The default toolbox does not contain this device by default, so it is necessary to edit or create a toolbox to include the ***3rd Party HVAC*** device.

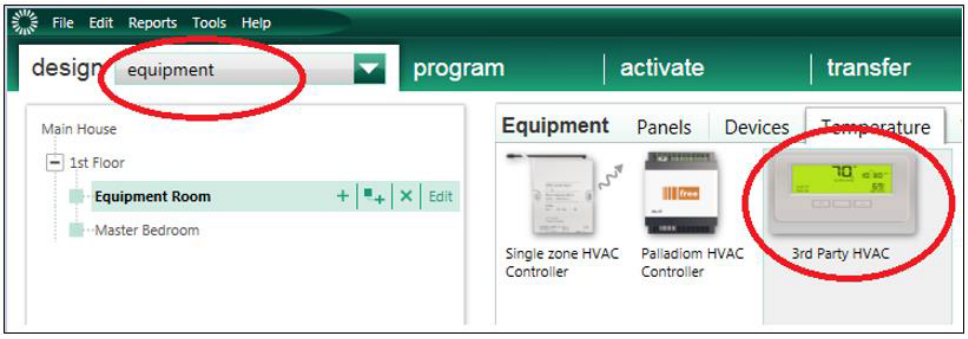

Once the 3rd Party HVAC device has been added to the ***Equipment*** area, provide a name for the HVAC device and select ***Mitsubishi*** as the ***Manufacturer***.

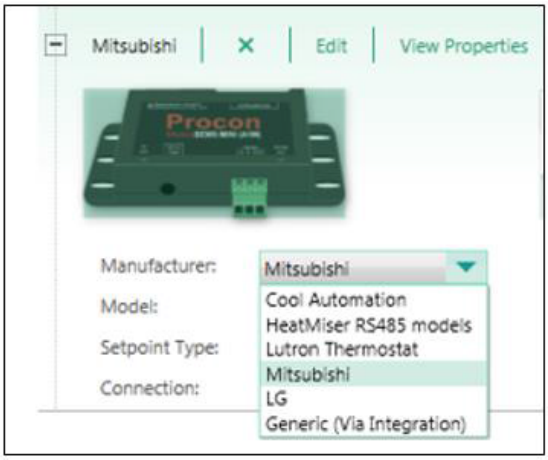

When adding the 3rd Party HVAC device, a zone is automatically added by default to the area where the ***Mitsubishi*** interface is located. The remaining configuration and setup must be done by a trained dealer or Lutron personnel.

Lutron Contact Numbers

WORLD HEADQUARTERS
USA
Lutron Electronics Co., Inc.
7200 Suter Road
Coopersburg, PA 18036-1299
TEL: +1.610.282.3800
FAX: +1.610.282.1243

support@lutron.com

www.lutron.com/support

North & South America
Customer Assistance
USA, Canada, Caribbean:
1.844.LUTRON1 (1.844.588.7661)
Mexico:
+1.888.235.2910
Central/South America:
+1.610.282.6701

UK AND EUROPE:
Lutron EA Limited
125 Finsbury Pavement
4th floor, London EC2A 1NQ
United Kingdom
TEL: +44.(0)20.7702.0657
FAX: +44.(0)20.7480.6899
FREEPHONE (UK): 0800.282.107
Technical Support: +44.(0)20.7680.4481

lutronlondon@lutron.com

ASIA:
Lutron GL Ltd.
390 Havelock Road
#07-04 King's Centre
Singapore 169662
TEL: +65.6220.4666
FAX: +65.6220.4333
Technical Support: 800.120.4491

lutronsea@lutron.com

Asia Technical Hotlines
Northern China: 10.800.712.1536
Southern China: 10.800.120.1536
Hong Kong: 800.901.849
Indonesia: 001.803.011.3994
Japan: +81.3.5575.8411
Macau: 0800.401
Taiwan: 00.801.137.737
Thailand: 001.800.120.665853
Other Countries: +65.6220.4666

Lutron Electronics Co., Inc.
7200 Suter Road
Coopersburg, PA 18036-1299 U.S.A.
P/N 048585 Rev. F 12/2019